MR90

Operator's Manual

CE

Issue 3.0 053-2768

Overview

Chapter Contents

Serial Number Location 2

Intended Use 3

Equipment Modification 2

Unit Components 4

FCC Statement - Internal Transmitter 5

RF Exposure Statement 5

Operator Orientation. 3

About This Manual 6

- Bulleted Lists 6
- Numbered Lists 6

Serial Number Location

Record serial numbers and date of purchase in spaces provided. Fluid unit serial number is located as shown.

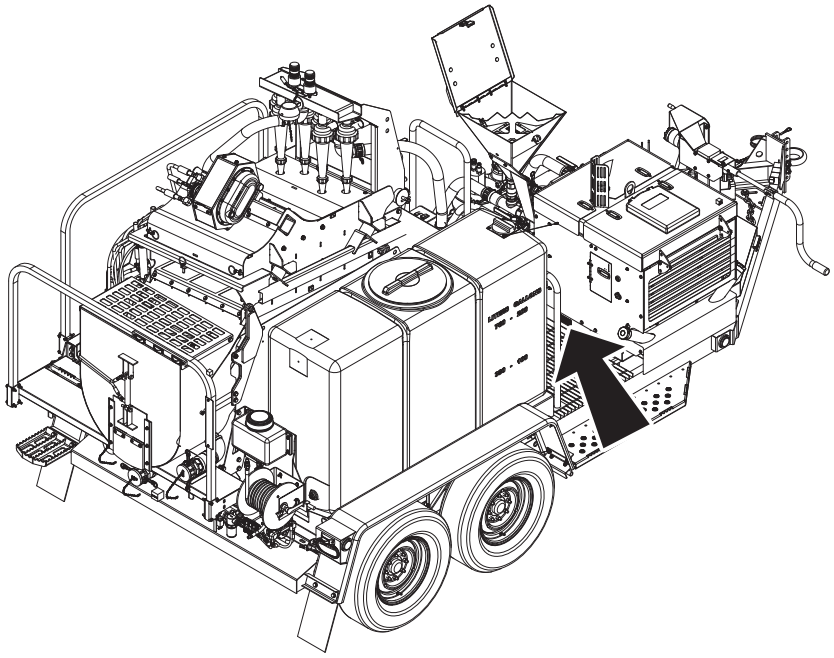

j46om013h.eps

Item	
date of manufacture	
date of purchase	
fluid unit serial number	
engine serial number	

Intended Use

The MR90 is a self-contained fluid handling unit capable of mixing and recycling drilling fluid and transferring fluid under pressure to the drilling unit. It is intended for operation in ambient temperatures from 32° to 115°F (0° to 46°C). Use in any other way is considered contrary to the intended use.

The MR90 can be used with Ditch Witch® drilling units. It should be operated, serviced, and repaired only by persons familiar with its particular characteristics and acquainted with the relevant safety procedures.

Equipment Modification

This equipment was designed and built in accordance with applicable standards and regulations. Modification of equipment could mean that it will no longer meet regulations and may not function properly or in accordance with the operating instructions. Modification of equipment should only be made by competent personnel possessing knowledge of applicable standards, regulations, equipment design functionality/requirements and any required specialized testing.

Unit Components

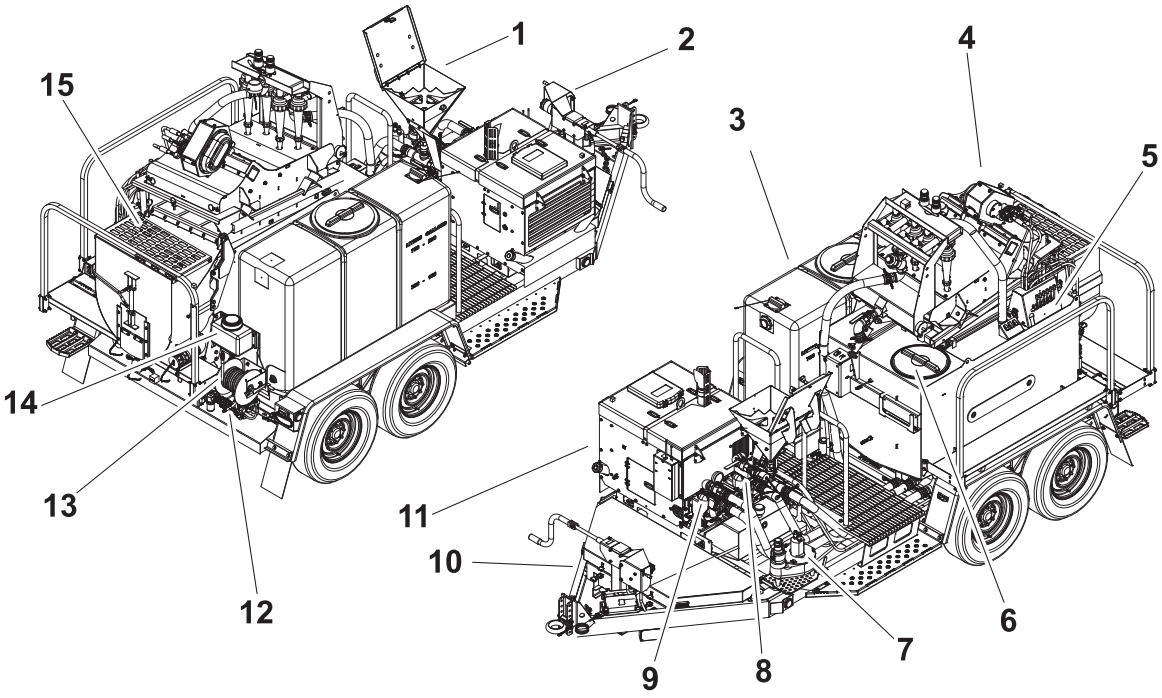

j46om007h.eps

1. Mixing hopper
2. Hydraulic jack
3. Fresh water tank (300 gallon)
4. Shaker
5. Operator station
6. MR90 tank
7. Pit pump
8. Mix/supply pump
9. Cleaning pump
10. T14 trailer
11. FM25h power unit
12. Water pump
13. Hose reel
14. Antifreeze tank
15. Spoils hopper*

*optional

FCC Statement - Internal Transmitter

U.S.

This device complies with Part 15 of the FCC Rules. Operation is subject to the following two conditions: (1) this device may not cause harmful interference, and (2) this device must accept any interference received, including interference that may cause undesired operation.

Changes or modifications not expressly approved by **The Charles Machine Works, Inc.** could void the user's authority to operate the equipment.

Contains **FCC ID**: LW9-ERGOF-2G4 & LW9-MFS-RX-2G4.

Canada

This device complies with Industry Canada *license-exempt* RSS standard(s). Operation is subject to the following two conditions: (1) this device may not cause interference, and (2) this device must accept any interference, including interference that may cause undesired operation of the device.

Contains **IC**: 2119B-ERGOF & 2119B-MFSRX.

Le présent appareil est conforme aux CNR d'Industrie Canada applicables aux appareils radio exempts de licence. L'exploitation est autorisée aux deux conditions suivantes: (1) l'appareil ne doit pas produire de brouillage, et (2) l'appareil doit accepter tout brouillage radioélectrique subi, même si le brouillage est susceptible d'en compromettre le fonctionnement.

Contient **IC**: 2119B-ERGOF & 2119B-MFSRX.

N 16819

RF Exposure Statement

In order to comply with RF exposure requirements during normal operation, this device must be held in front of the body horizontally. The antenna must be vertical in line with the body with at least 4" (100 mm) separation distance from the body.

This equipment has been tested and found to comply with the limits for a Class B digital device, pursuant to Part 15 of the FCC rules. These limits are designed to provide reasonable protection against harmful interference in a residential installation. This equipment generates, uses and can radiate radio frequency energy and, if not installed and used in accordance with the instructions, may cause harmful interference to radio communications. However, there is no guarantee that interference will not occur in a particular installation. If this equipment does cause harmful interference to radio or television reception, which can be determined by turning the equipment off and on, the user is encouraged to try to correct the interference by one or more of the following measures:

- Reorient or relocate the receiving antenna.
- Increase the separation between the equipment and receiver.
- Connect the equipment into an outlet on a circuit different from that to which the receiver is connected.
- Consult the dealer or an experienced radio/TV technician for help.

This device complies with Health Canada's Safety Code. The installer of this device should ensure that RF radiation is not emitted in excess of the Health Canada's requirement. Information can be obtained at http://hc-sc.qc.ca/ewh-sem/pub/radiation/radio_guide-lignes_direct-eng.php.

Operator Orientation

1. Front of unit
2. Right of unit
3. Rear of unit
4. Left of unit

Right and left sides of machine are determined by facing towing vehicle.

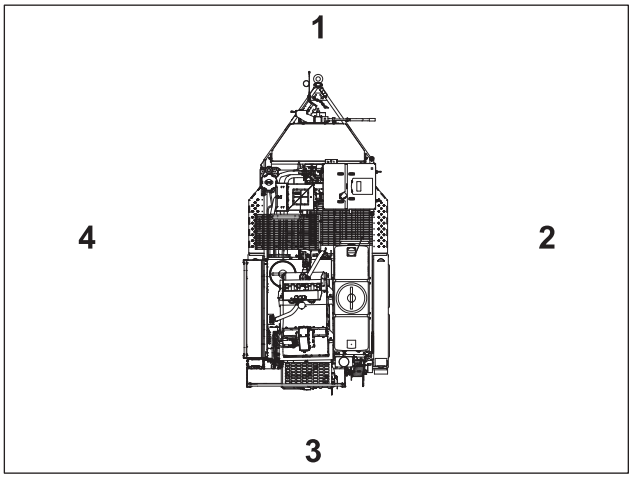

j46om006h.eps

About This Manual

This manual contains information for the proper use of this machine. See the beige **Operation Overview** pages for basic operating procedures. Cross references such as "See page 50" will direct you to detailed procedures.

Bulleted Lists

Bulleted lists provide helpful or important information or contain procedures that do not have to be performed in a specific order.

Numbered Lists

Numbered lists contain illustration callouts or list steps that must be performed in order.

Foreword

This manual is an important part of your equipment. It provides safety information and operation instructions to help you use and maintain your Ditch Witch® equipment.

Read this manual before using your equipment. Keep it with the equipment at all times for future reference. If you sell your equipment, be sure to give this manual to the new owner.

If you need a replacement copy, contact your Ditch Witch dealer. If you need assistance in locating a dealer, visit our website at **www.ditchwitch.com** or write to the following address:

The Charles Machine Works, Inc.
Attn: Marketing Department
PO Box 66
Perry, OK 73077-0066
USA

The descriptions and specifications in this manual are subject to change without notice. The Charles Machine Works, Inc. reserves the right to improve equipment. Some product improvements may have taken place after this manual was published. For the latest information on Ditch Witch equipment, see your Ditch Witch dealer.

Thank you for buying and using Ditch Witch equipment.

Reporting Safety Defects

If you believe that your vehicle has a defect which could cause a crash or could cause injury or death, you should immediately inform the National Highway Traffic Safety Administration (NHTSA) in addition to notifying the Product Safety Coordinator at The Charles Machine Works, Inc.

If NHTSA receives similar complaints, it may open an investigation, and if it finds that a safety defect exists in a group of vehicles, it may order a recall and remedy campaign. However, NHTSA cannot become involved in any individual problems between you, your Ditch Witch dealer, or The Charles Machine Works, Inc.

To contact NHTSA you may either call the Auto Safety Hotline toll-free at 1-888-327-4236 (TTY: 1-800-424-9153), go to http://www.safercar.gov, or write to:

Administrator
NHTSA
1200 New Jersey Avenue S.E.
Washington, DC 20590

You can also obtain other information about motor vehicle safety from http://www.safercar.gov.

MR90
Operator's Manual

Issue number 3.0/OM-10/15
Part number 053-2768

Copyright 2014, 2015
by The Charles Machine Works, Inc.

Ditch Witch® and Ditch Witch are registered trademarks of The Charles Machine Works, Inc.

This product and its use may be covered by one or more patents at http://patents.charlesmachine.works.

Contents

Overview 1
machine serial number, information about the type of work this machine is designed to perform, basic machine components, and how to use this manual

Foreword 5
part number, revision level, and publication date of this manual, and factory contact information

Safety 9
machine safety alerts and emergency procedures

Controls 17
machine controls, gauges, and indicators and how to use them

Prepare 29
procedures for inspecting the jobsite and preparing the jobsite for work

Transport 33
procedures for lifting and hauling

Handle Fluid 37
procedures for mixing, recycling, and transferring fluid

Systems and Equipment 43
procedures for selecting fluid additives, determining fluid requirements and fluid measurements, and screens

Complete the Job 43
procedures for rinsing and storing equipment

Service 45
service intervals and instructions for this machine including lubrication, replacement of wear items, and basic maintenance

Specifications 57
machine specifications including weights, measurements, power ratings, and fluid capacities

Support 113
the warranty policy for this machine, and procedures for obtaining warranty consideration and training

Service Record 117
a record of major service performed on the machine

Appendix **119**
additional information about your equipment

Safety

Chapter Contents

Guidelines 12

California Proposition 65 Warning 12

Emergency Procedures 13

- Electric Strike Description 13
- If an Electric Line is Damaged 14
- If a Gas Line is Damaged 15
- If a Fiber Optic Cable is Damaged 16
- If Machine Catches on Fire 16

Safety Alert Classifications 17

Machine Safety Alerts 18

Guidelines

Follow these guidelines before operating any jobsite equipment:

- Complete proper training and read operator's manual before using equipment.
- Contact your local One-Call (811 in USA) or the One-Call referral number (888-258-0808 in USA and Canada) to have underground utilities located before digging. Also contact any utilities that do not participate in the One-Call service. Mark proposed path with white paint prior to contacting One-Call or utilities.
- Classify jobsite based on its hazards and use correct tools and machinery, safety equipment, and work methods for jobsite.
- Mark jobsite clearly and keep spectators away.
- Wear personal protective equipment.
- Review jobsite hazards, safety and emergency procedures, and individual responsibilities with all personnel before work begins. Safety videos are available from your Ditch Witch® dealer or at www.ditchwitch.com/safe.
- Fully inspect equipment before operating. Repair or replace any worn or damaged parts. Replace missing or damaged safety shields and safety signs. Contact your Ditch Witch dealer for assistance.
- Use equipment carefully. Stop operation and investigate anything that does not look or feel right.
- Do not operate unit where flammable gas may be present.
- Only operate equipment in well-ventilated areas.
- Contact your Ditch Witch dealer if you have any question about operation, maintenance, or equipment use.
- Complete the equipment checklist located at www.ditchwitch.com/safe.

California Proposition 65 Warning

This product contains chemicals known to the State of California to cause cancer, birth defects, or other reproductive harm.

- battery posts, terminals and related accessories
- engine exhaust
- ethylene glycol

Emergency Procedures

WARNING Jobsite hazards could cause death or serious injury. Use correct equipment and work methods. Use and maintain proper safety equipment.

Before operating any equipment, review emergency procedures and check that all safety precautions have been taken.

EMERGENCY SHUTDOWN - Turn ignition switch to stop position or push remote engine stop button (if equipped).

Electric Strike Description

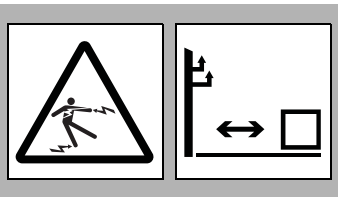

DANGER Electric shock. Contacting electric lines will cause death or serious injury. Know location of lines and stay away.

When working near electric cables, remember the following:

- Electricity follows all paths to ground, not just path of least resistance.
- Pipes, hoses, and cables will conduct electricity back to all equipment.
- Low voltage current can injure or kill. Many work-related electrocutions result from contact with less than 440 volts.

Most electric strikes are not noticeable, but indications of a strike include:

- power outage
- smoke
- explosion
- popping noises
- arcing electricity

If any of these occur, assume an electric strike has occurred.

If an Electric Line is Damaged

If you suspect an electric line has been damaged and you are **on truck or trailer**, DO NOT MOVE. Remain on truck or trailer and take the following actions. The order and degree of action will depend on the situation.

- Warn people nearby that an electric strike has occurred. Instruct them to leave the area and contact utility.
- Do not allow anyone into area until given permission by utility company.
- Do not allow anyone to touch equipment.

If you suspect an electric line has been damaged and you are **off truck or trailer**, DO NOT TOUCH EQUIPMENT. Take the following actions. The order and degree of action will depend on the situation.

- LEAVE AREA. The ground surface may be electrified so take small shuffle steps with feet close together to reduce the hazard of being shocked from one foot to the other.
- Contact utility company to shut off power.
- Do not return to area or allow anyone into area until given permission by utility company.

If a Gas Line is Damaged

WARNING Fire or explosion possible. Fumes could ignite and cause burns. No smoking, no flame, no spark. 275-419 (2P)

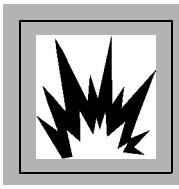

WARNING Explosion possible. Serious injury or equipment damage could occur. Follow directions carefully.

If you suspect a gas line has been damaged, take the following actions. The order and degree of action will depend on the situation.

- Immediately shut off engine(s), if this can be done safely and quickly.
- Remove any ignition source(s), if this can be done safely and quickly.
- Warn others that a gas line has been cut and that they should leave the area.
- Leave jobsite as quickly as possible.
- Immediately call your local emergency phone number and utility company.
- If jobsite is along street, stop traffic from driving near jobsite.
- Do not return to jobsite until given permission by emergency personnel and utility company.

If a Fiber Optic Cable is Damaged

Do not look into cut ends of fiber optic or unidentified cable. Vision damage can occur. Contact utility company.

If Machine Catches on Fire

Perform emergency shutdown procedure and then take the following actions. The order and degree of action will depend on the situation.

- Immediately move battery disconnect switch (if equipped and accessible) to disconnect position.
- If fire is small and fire extinguisher is available, attempt to extinguish fire.
- If fire cannot be extinguished, leave area as quickly as possible and contact emergency personnel.

Safety Alert Classifications

These classifications and the icons defined on the following pages work together to alert you to situations which could be harmful to you, jobsite bystanders or your equipment. When you see these words and icons in the book or on the machine, carefully read and follow all instructions. YOUR SAFETY IS AT STAKE.

Watch for the three safety alert levels: **DANGER**, **WARNING** and **CAUTION**. Learn what each level means.

DANGER indicates a hazardous situation that, if not avoided, will result in death or serious injury. This signal word is to be limited to the most extreme situations.

WARNING indicates a hazardous situation that, if not avoided, could result in death or serious injury.

CAUTION indicates a hazardous situation that, if not avoided, could result in minor or moderate injury.

Watch for two other words: ***NOTICE*** and **IMPORTANT**.

NOTICE indicates information considered important, but not hazard-related (e.g., messages relating to property damage).

IMPORTANT can help you do a better job or make your job easier in some way.

Machine Safety Alerts

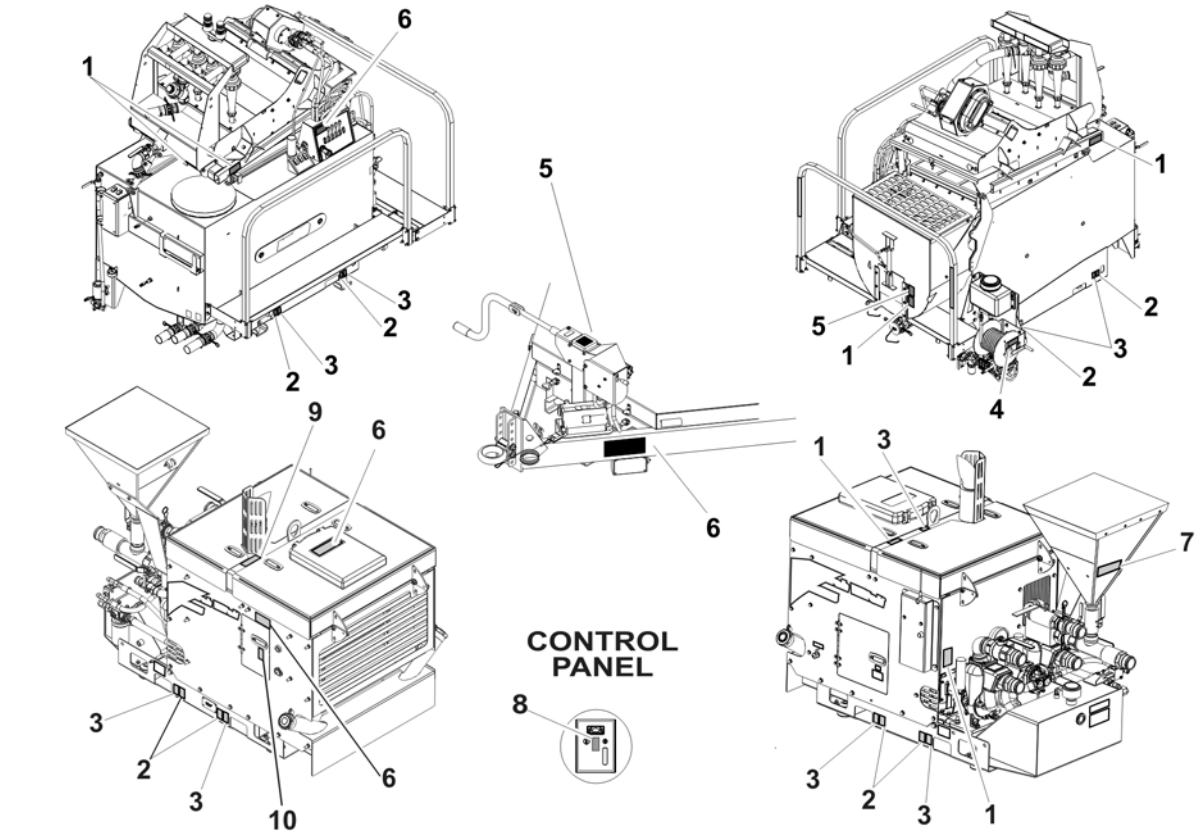

1	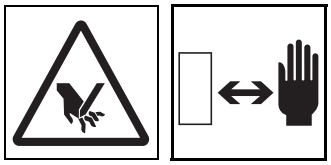	**WARNING** Moving parts could cut off hand or foot. Stay away. 275-184, 273-437, 273-546
2	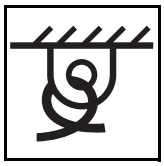	Tiedown location. See Transport chapter for more information. 274-318
3		Lift point. See Transport chapter for more information. 274-442

4	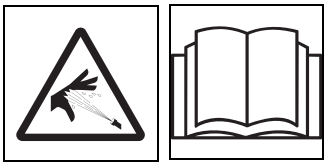	**WARNING** Pressurized fluid or air could pierce skin and cause severe injury. Refer to operator's manual for proper use. 270-6035
5	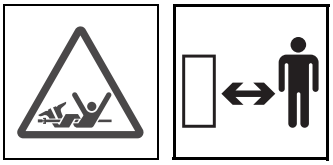	**DANGER** Rotating shaft will cause death or serious injury. Stay away. 270-1506
6	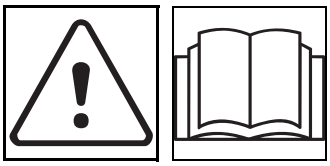	**WARNING** Read operator's manual. Know how to use all controls. Your safety is at stake. 273-475
7	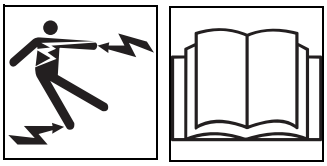	**DANGER** Electric shock will cause death or serious injury. Fluid system could become electrified while connected to drilling unit. Read operator's manual and know emergency procedures. 273-265
8		**WARNING** Jobsite hazards could cause death or serious injury. Use correct equipment and work methods. Use and maintain proper safety equipment. 274-050; 274-724 (2P)
9	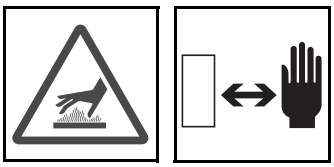	**CAUTION** Hot parts may cause burns. Do not touch until cool or wear gloves. 275-355 (2-P), 273-423 (2-P)
10	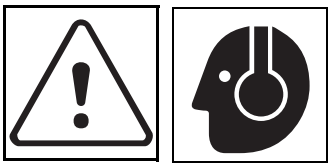	**CAUTION** Exposure to high noise levels may cause hearing loss. Wear hearing protection. 700-009 (2-P)

Controls

Chapter Contents

Power Unit 22

Mixing Unit 30

Recycling Unit 33

Power Unit

Controls and Indicators

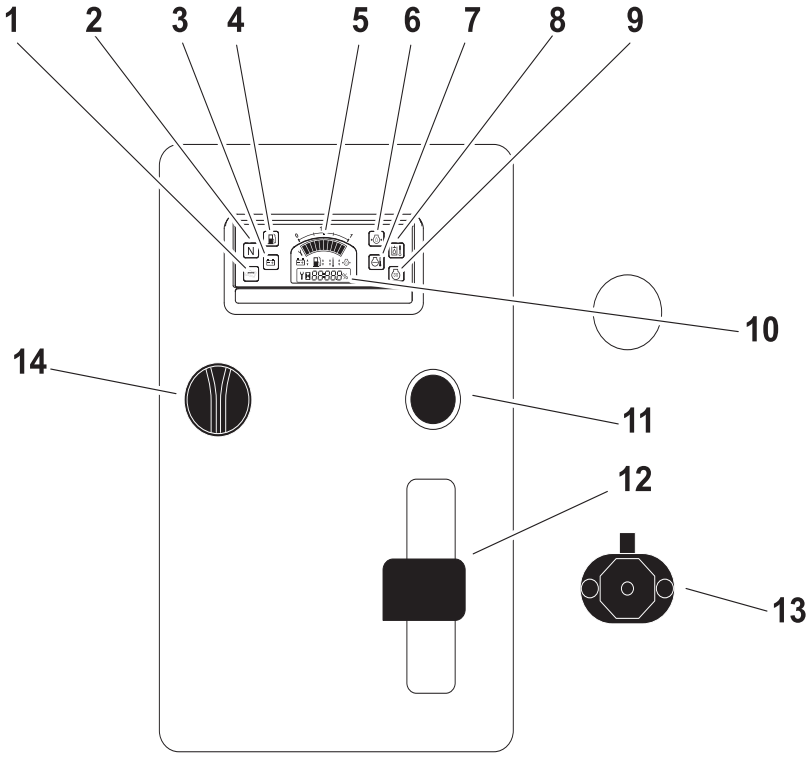

j46om002h.eps

1. Not used
2. Not used
3. Battery indicator
4. Low fuel indicator
5. Fuel gauge
6. Engine oil pressure indicator
7. Coolant temperature indicator
8. Hydraulic fluid temperature indicator
9. Glow plug indicator
10. Hourmeter
11. Cold start button
12. Throttle
13. Auxiliary outlet
14. Ignition switch

Item	Description	Notes
1. Not used		
2. Not used		

Item	Description	Notes
3. Battery indicator 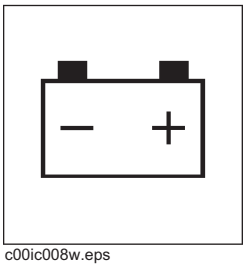 c00ic008w.eps	Indicates low battery voltage.	
4. Low fuel indicator c00ic637h.eps	Displays fuel level near empty.	
5. Fuel gauge 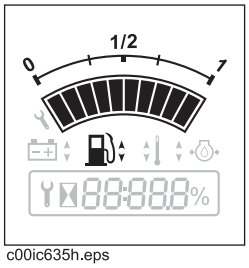 c00ic635h.eps	Displays fuel level in tank.	Fuel tank holds 15 gal (56.85 L). ***NOTICE:*** Use ultra low sulfur fuel only.
6. Engine oil pressure indicator 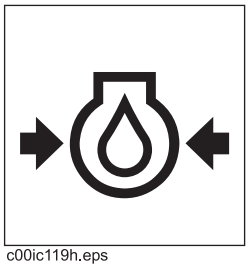 c00ic119h.eps	Lights when engine oil pressure falls below 8-12 psi (.6-.8 bar). Also lights briefly when engine is started.	If light remains on: • Turn off engine. • Check oil level. • If pressure is still low, consult engine manual.

Item	Description	Notes
7. Coolant temperature indicator 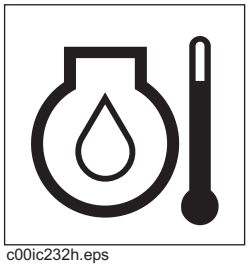 c00ic232h.eps	Lights when engine coolant temperature is over 275°F (135°C). Also, lights briefly when engine is started.	If light remains on: • Turn off engine and let unit cool. • Check fan belt tension. • Check for low coolant level. • Check cooling fins for dirt and debris.
8. Hydraulic fluid temperature indicator 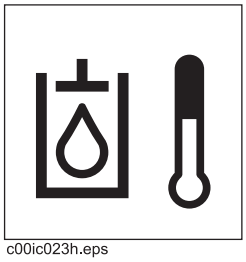 c00ic023h.eps	Lights and alarm sounds when hydraulic fluid is overheating.	Check hydraulic fluid level. Reduce load. Ensure oil cooler is clean.
9. Glow plug indicator 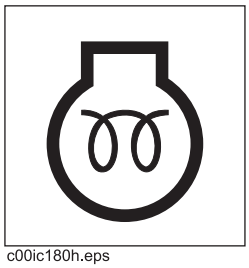 c00ic180h.eps	Lights when cold start button is pressed.	
10. Hourmeter 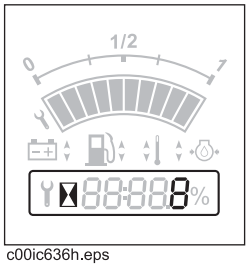 c00ic636h.eps	Displays engine operating time.	Hourmeter runs when ignition switch is on. Use these times to schedule service.

Item	Description	Notes
11. Cold start button 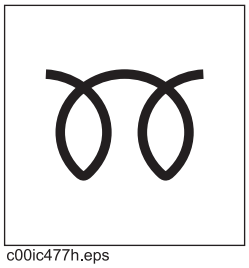 c00ic477h.eps	To help start cold engine, turn ignition switch to first position. Press cold start button as directed in notes. Release button, then turn ignition switch clockwise to start.	**IMPORTANT:** Press cold start button according to temperatures below. • If ambient temperature is below 40°F (4°C), press and hold button for five seconds. • If ambient temperature is below 20°F (-7°C), press and hold button for ten seconds. • Do not press for more than 20 seconds continuously.
12. Throttle 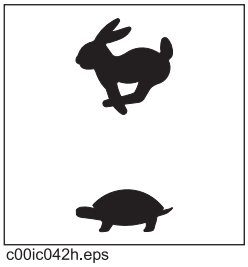 c00ic042h.eps	To increase engine speed, move up. To decrease engine speed, move down.	
13. Auxiliary outlet 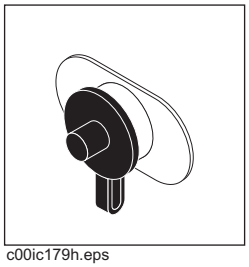 c00ic179h.eps	To operate work lights or other 12V devices, plug into outlet.	Outlet has power only when ignition switch is on.
14. Ignition switch 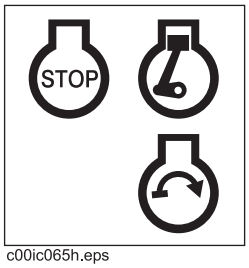 c00ic065h.eps	To start engine, insert key and turn clockwise. To stop engine, turn key counterclockwise.	

Remote Control (optional)

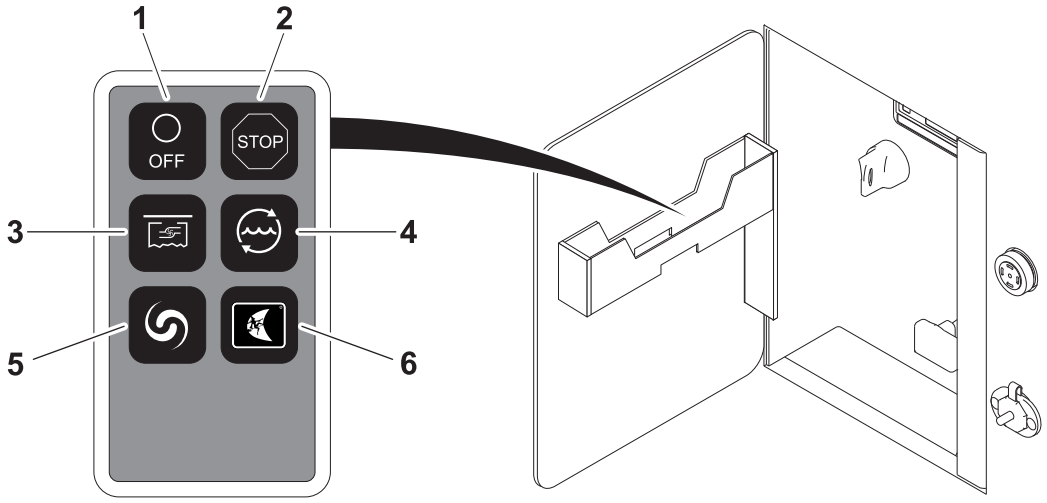

j46om019h.eps

1. Remote control power button
2. Remote stop button
3. Pit pump button
4. Cleaning pump button
5. Mix/supply pump button
6. Not used

Item	Description	Notes
1. Remote control power button 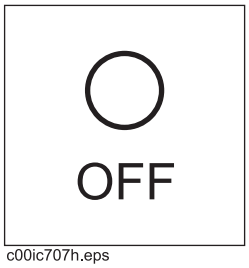 c00ic707h.eps	To turn remote control module off, press.	**IMPORTANT:** • Pressing any button will turn the remote on. • Turning the remote off does not shut off pumps.
2. Remote stop button 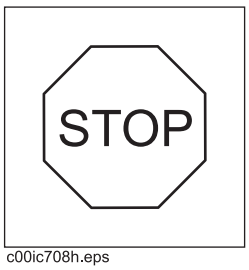 c00ic708h.eps	To stop the engine, press.	

Item	Description	Notes
3. Pit pump button 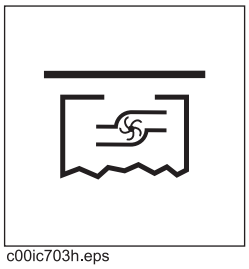 c00ic703h.eps	To turn pit pump on and off, press.	Pit pump control must be engaged for the remote function to work. See "Pit pump/pressure wash pump selector" on page 35.
4. Cleaning pump button 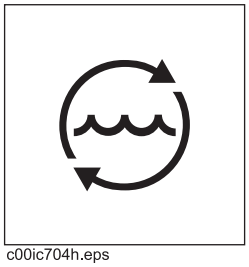 c00ic704h.eps	To turn cleaning pump on and off, press.	Switch at control panel must be on for remote function to work. See "Cleaning pump switch" on page 34.
5. Mix/supply pump button 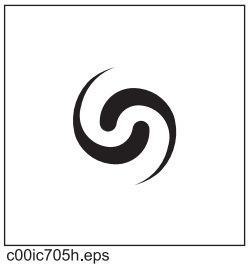 c00ic705h.eps	To turn mix/supply pump on and off, press.	Switch at control panel must be on for remote function to work. See "Mix/supply pump switch" on page 34.
6. Not used c00ic706h.eps		

Indicators

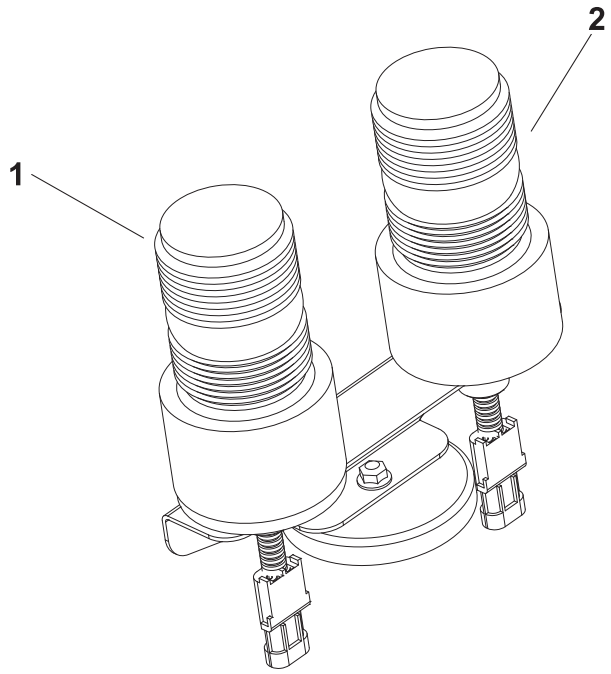

j46om043h.eps

1. Fluid low warning light
2. Fluid full warning light

Item	Description	Notes
1. Fluid low warning light	Amber light will flash when volume of fluid in MR90 tank is too low.	**IMPORTANT:** This light is magnetic and can be moved to ensure better visibility.
2. Fluid full warning light	Green light will flash when volume of fluid in dirty side of MR90 tank is full.	**IMPORTANT:** This light is magnetic and can be moved to ensure better visibility.

Miscellaneous

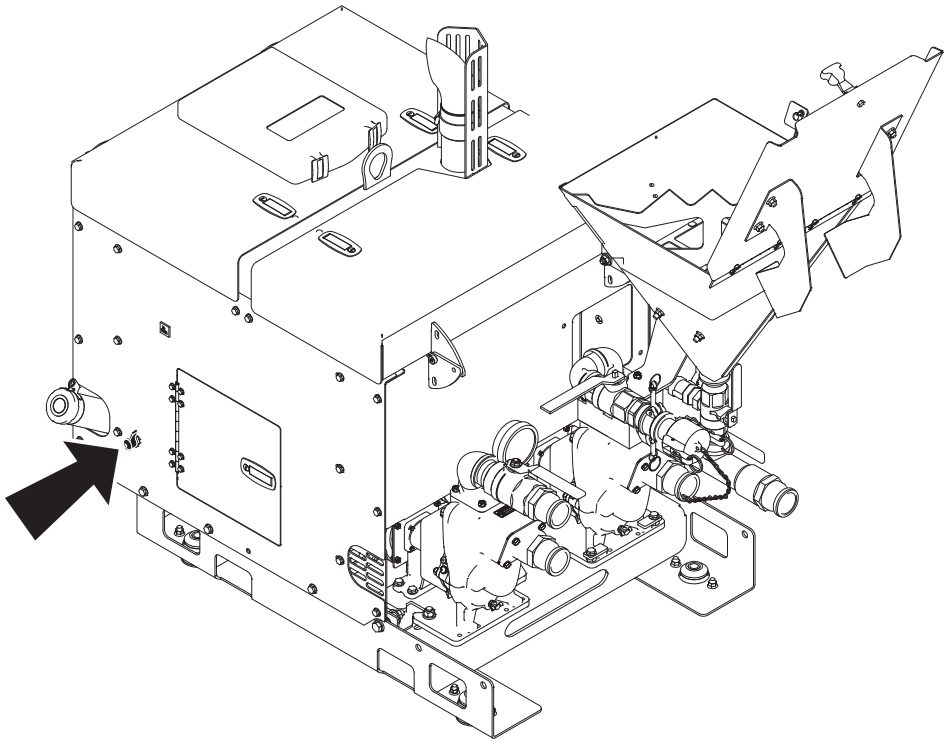

j46om010h.eps

Item	Description	Notes
Battery disconnect switch 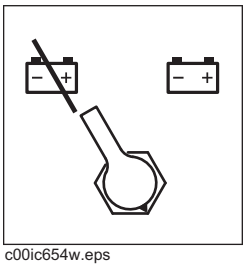 c00ic654w.eps	To connect, move clockwise. To disconnect, move counterclockwise.	

Mixing Unit

Gauges

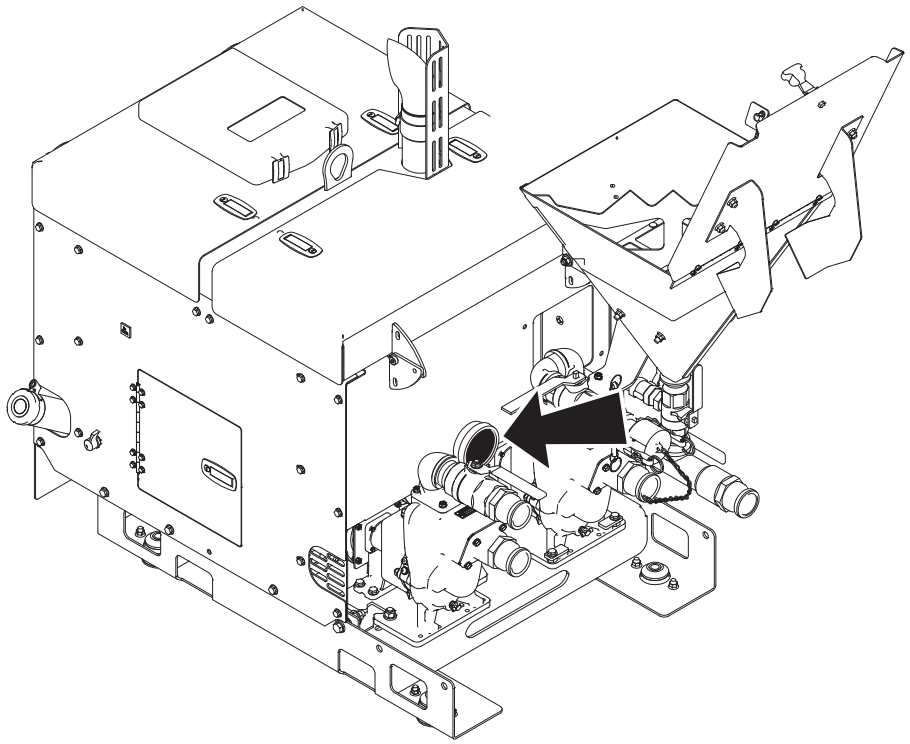

j46om011h.eps

Hydrocyclone pressure gauge

Item	Description	Notes
Hydrocyclone pressure gauge 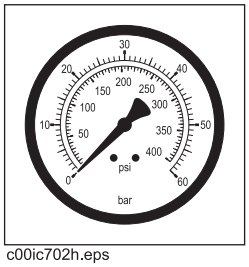 c00ic702h.eps	Indicates the pressure of fluid moving through the hydrocyclones. Gauge should read 30-35 psi (2.06-2.41 bar).	**IMPORTANT:** • If gauge reads lower than 30-35 psi (2.06-2.41 bar), check hydrocyclones. See "Clean Hydrocyclones" on page 98. • If gauge reads higher than 30-35 psi (2.06-2.41 bar) check the Y-strainer. See"Clean Y-Strainer" on page 83.

Valves

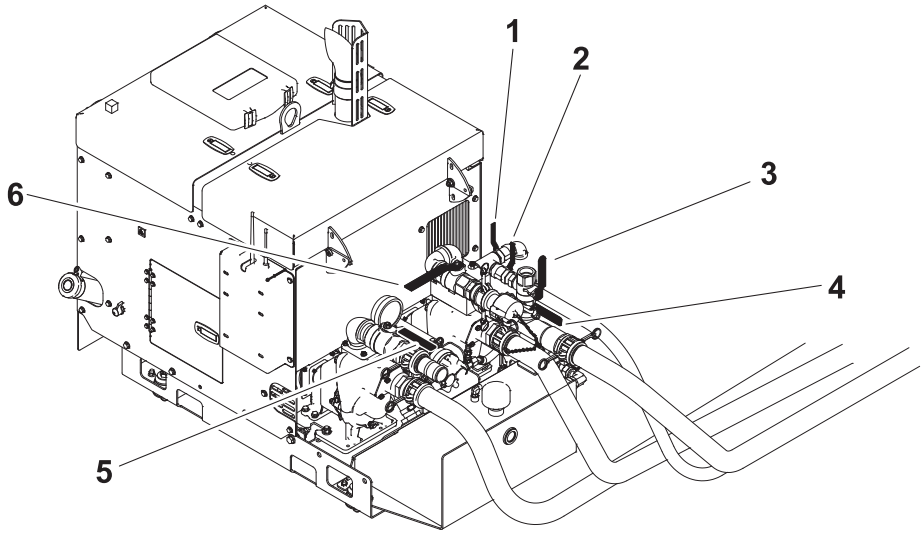

j46om031h.eps

1. Fluid sample valve
2. Circulating jet valve
3. Mixing hopper valve
4. Venturi jet valve
5. Hydrocyclone valve
6. Drill supply valve

Item	Description	Notes
1. Fluid sample valve	To obtain a sample of drilling fluid for testing, open valve.	
2. Circulating jet valve	To circulate fluid while mixing, open valve. To stop circulation, close valve.	
3. Mixing hopper valve	To allow flow from hopper to mixing venturi, open valve. To stop flow from hopper to mixing venturi, close valve.	**IMPORTANT:** • Open valve only when pouring additives into hopper for mixing. Close valve when finished. • Do not open valve unless pump is running and venturi jet valve is open. Fluid could flow back into hopper.

Item	Description	Notes
4. Venturi jet valve	To add drilling additives to hopper, open valve. To stop flow of drilling additives, close valve.	
5. Hydrocyclone valve	To allow air flow to operate hydrocyclones, open valve. To stop air flow from hydrocyclones, close valve.	
6. Drill supply valve	To supply fluid to drill, open valve. To stop supply of fluid to drill, close valve.	

Recycling Unit

Controls

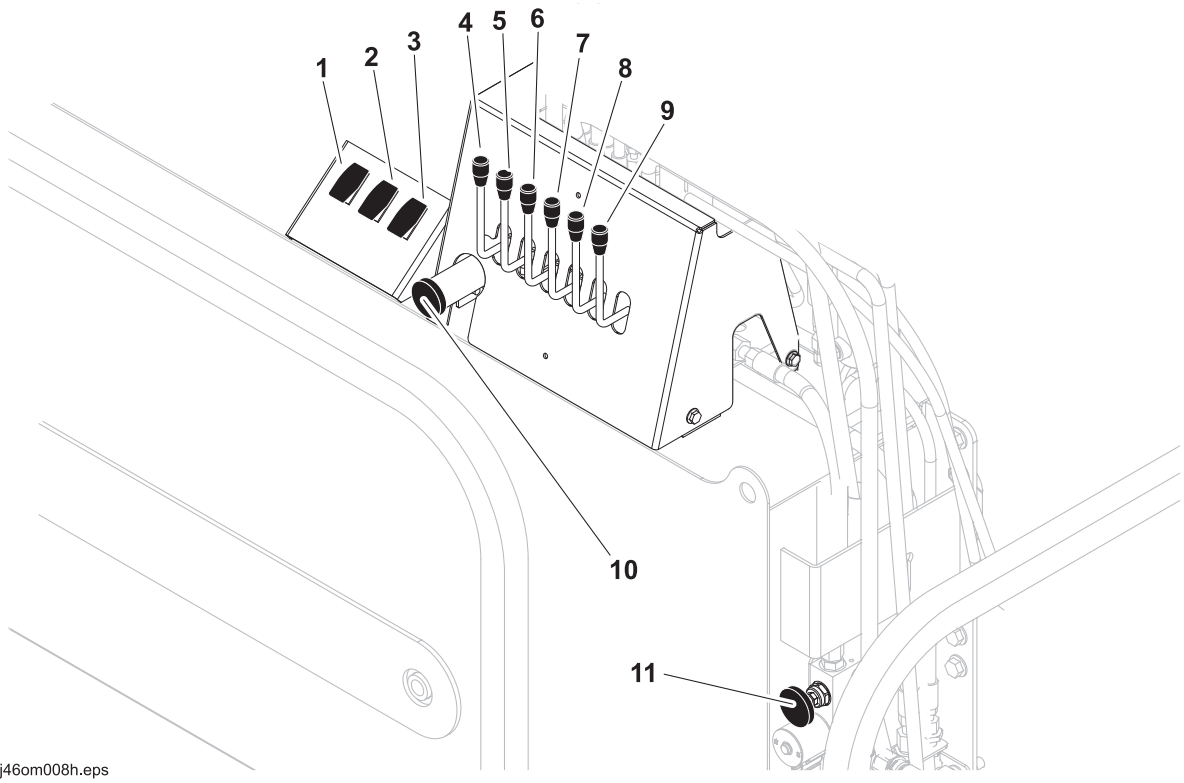

1. Cleaning pump switch
2. Mix/supply pump switch
3. Pit pump auto control switch
4. Shaker control
5. Pit pump/pressure wash pump selector
6. Screen forward/rear tilt control
7. Screen left/right tilt control
8. Spoils hopper mixer control*
9. Spoils hopper door control*
10. Shaker speed control
11. Pit pump speed adjustment control

*optional

Item	Description	Notes
1. Cleaning pump switch 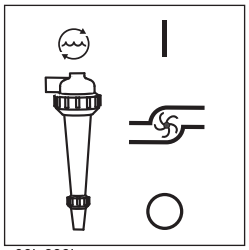 c00ic689h.eps	To turn cleaning pump on, press top. To turn pump off, press bottom.	
2. Mix/supply pump switch 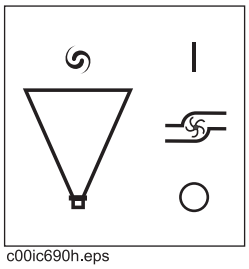 c00ic690h.eps	To turn mix/supply pump on, press top. To turn pump off, press bottom.	
3. Pit pump auto control switch 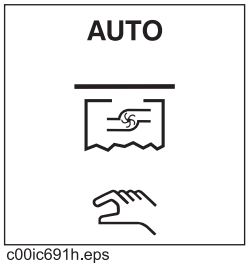 c00ic691h.eps	To turn pit pump auto control on, press top. To allow manual control, press bottom.	**IMPORTANT:** Leave pit pump auto control on to reduce possibility of over-filling dirty side of MR90 tank.
4. Shaker control 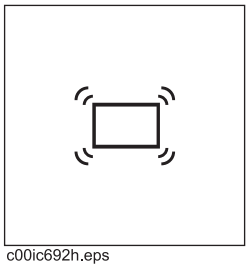 c00ic692h.eps	To start shaker, push lever up. To stop shaker, pull lever back.	

Item	Description	Notes
5. Pit pump/pressure wash pump selector 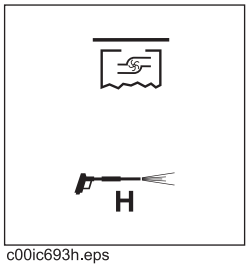 c00ic693h.eps	To turn pit pump on, push lever up. To turn pressure washer pump on, pull lever back. To turn pumps off, center lever.	**IMPORTANT:** • Pit pump lever must be engaged for remote to function. • Do not leave lever pulled back when not using wash wand. Damage may occur.
6. Screen front/rear tilt control 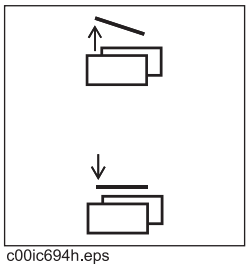 c00ic694h.eps	To raise front of screens, push lever up. To lower front of screens, pull lever back.	
7. Screen left/right tilt control 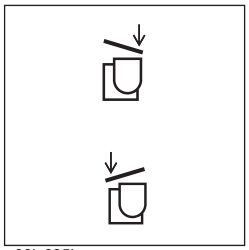 c00ic695h.eps	To tilt screens to the right, push lever up. To tilt screens to the left, pull lever back.	
8. Spoils hopper mixer control (optional) 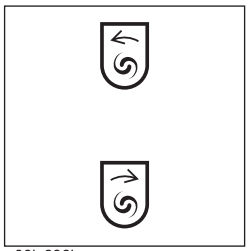 c00ic696h.eps	To turn spoils hopper mixer counterclockwise, push lever up. To turn spoils mixer clockwise, pull lever back. To turn spoils hopper mixer off, center lever.	

Item	Description	Notes
9. Spoils hopper door control (optional) 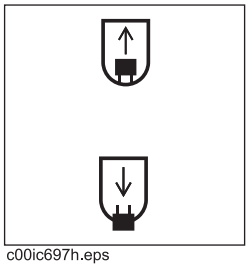 c00ic697h.eps	To raise door on back of spoils hopper, push lever up. To lower door on back of spoils hopper, pull lever back.	
10. Shaker speed control 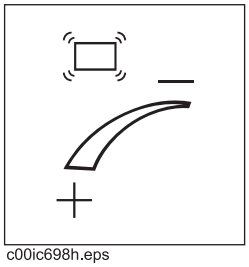 c00ic698h.eps	To increase shaker speed, turn counterclockwise. To decrease shaker speed, turn clockwise.	
11. Pit pump speed adjustment control 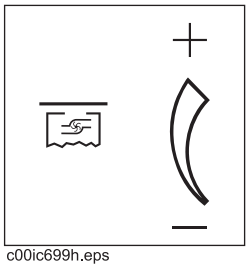 c00ic699h.eps	To increase pit pump flow, turn clockwise. To decrease pit pump flow, turn counterclockwise.	

Auxiliary Controls

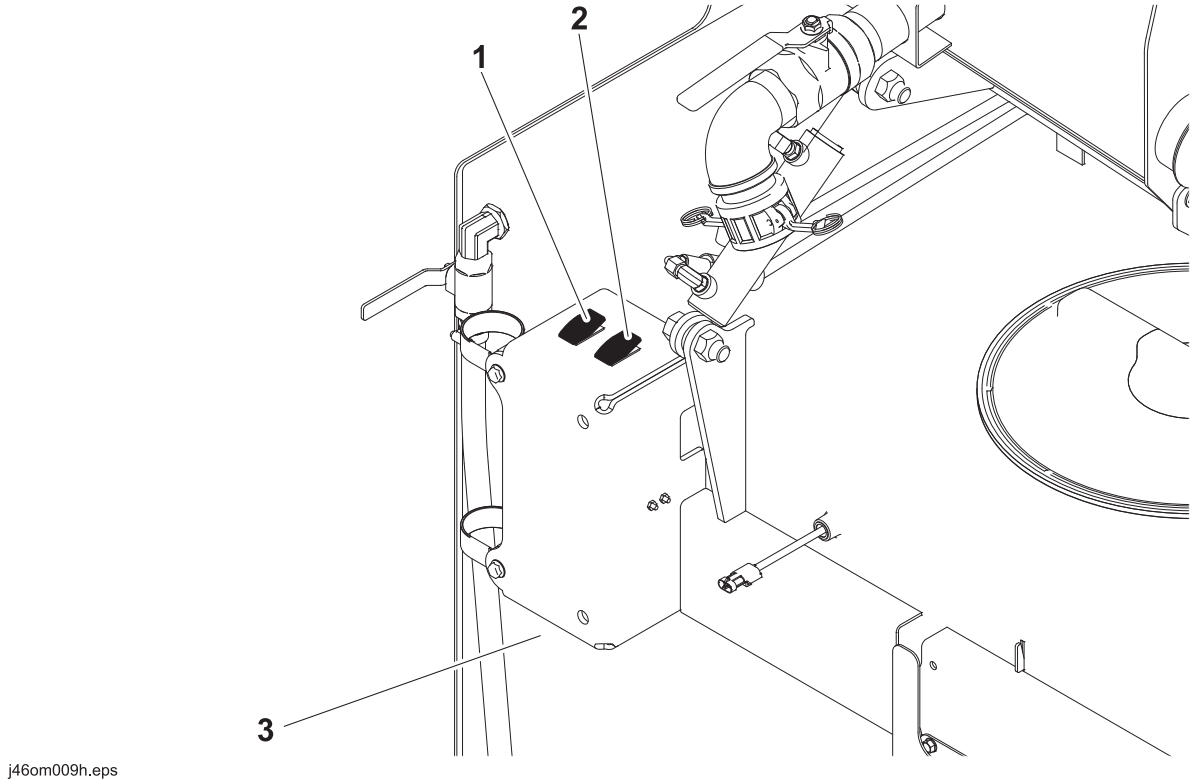

j46om009h.eps

1. Fresh water transfer pump switch
2. Auxiliary outlet switch
3. Auxiliary outlet

Item	Description	Notes
1. Fresh water transfer pump switch 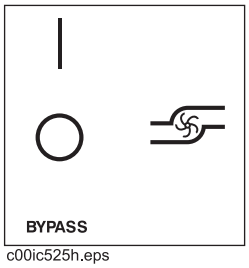 c00ic525h.eps	To turn fresh water transfer pump on, press top. To turn pump off, press bottom.	Transfers water from 300 gal tank to the MR90 tank.

Item	Description	Notes
2. Auxiliary outlet switch 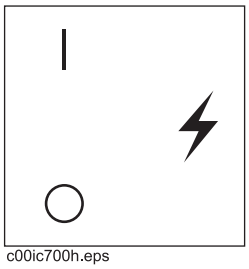 c00ic700h.eps	To turn auxiliary outlet on, press top. To turn auxiliary outlet off, press bottom.	
3. Auxiliary outlet 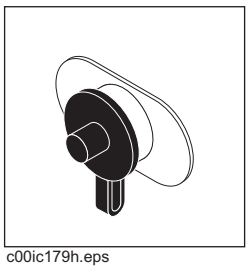 c00ic179h.eps	To operate work lights or other 12V devices, plug into outlet.	Outlet has power only when ignition switch is on.

Valves

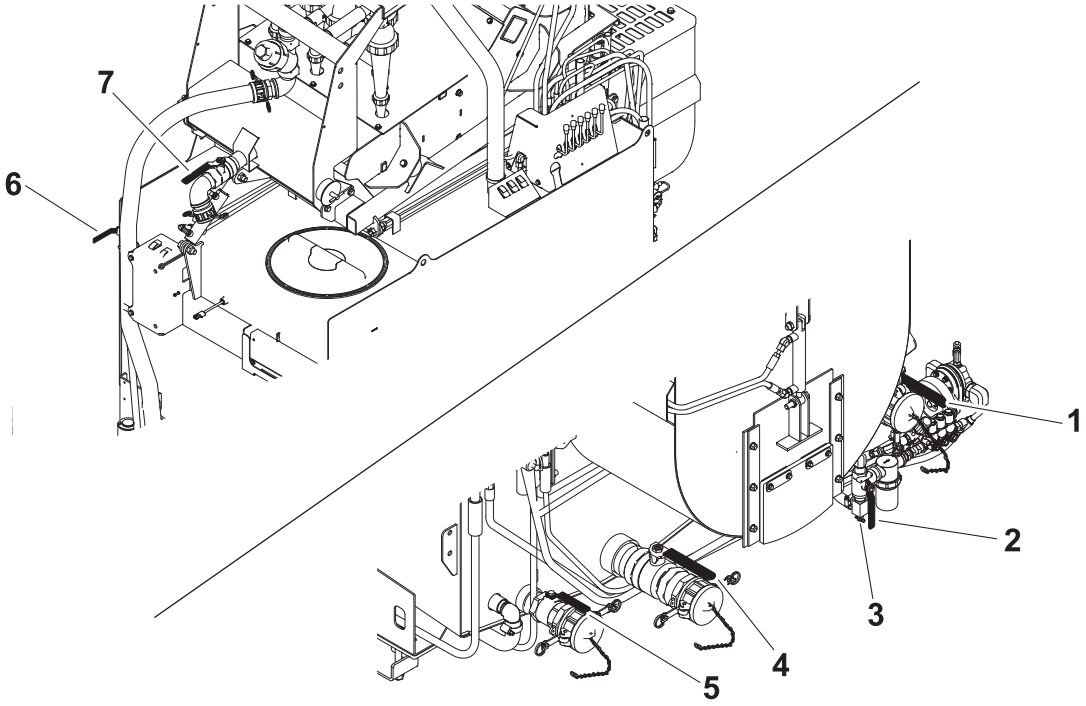

j46om032h.eps

1. Spoils hopper drain valve*
2. Antifreeze valve
3. Water drain valve
4. Dirty side tank drain valve
5. Clean side tank drain valve
6. Fresh water control valve
7. Mud flow control valve

*Optional

Item	Description	Notes
1. Spoils hopper drain valve (optional)	To drain spoils hopper, open valve.	
2. Antifreeze valve	To mix antifreeze into the fresh water pump, open valve.	
3. Water drain valve	To drain water from fresh water tank, open valve.	
4. Dirty side tank drain valve	To drain dirty side tank, open valve.	
5. Clean side tank drain valve	To drain clean side tank, open valve.	

Item	Description	Notes
6. Fresh water control valve	To transfer water from 300 gal tank to MR90 tank, open valve.	**IMPORTANT:** • Turn on with fresh water transfer pump to transfer water to MR90 tank. • Shut off when MR90 tank is full to avoid overflow from dirty side tank into fresh water tank.
7. Mud flow control valve	To increase mud flow onto screens, move valve toward open. To decrease mud flow onto screens, move valve toward close.	

Trailer Controls

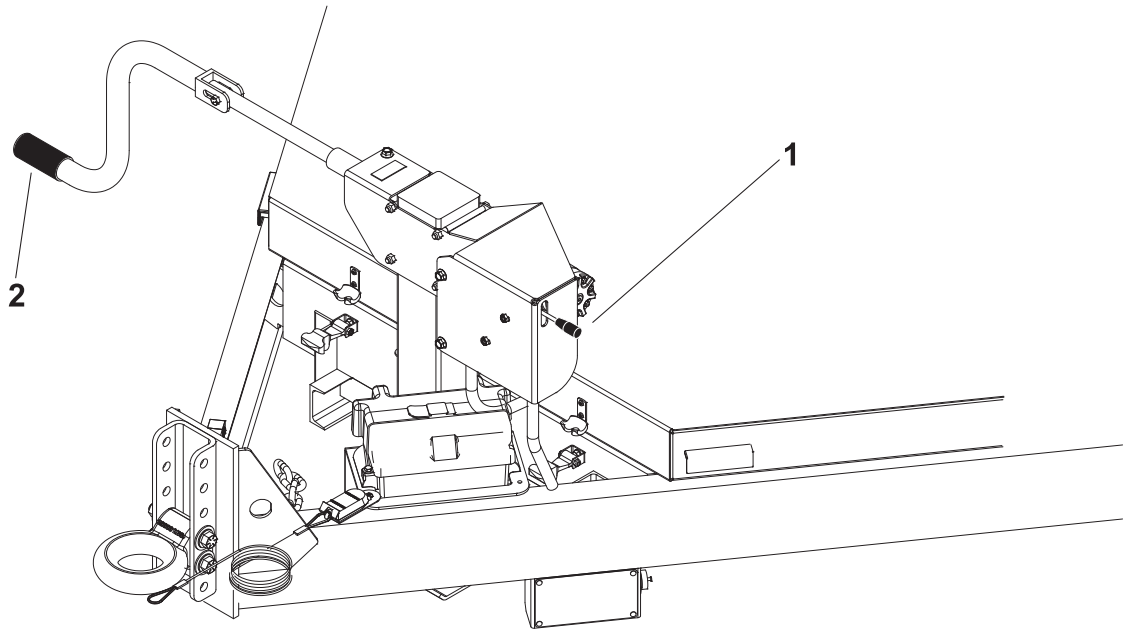

j46om012h.eps

1. Hydraulic trailer jack control
2. Manual trailer jack handle

Item	Description	Notes
1. Hydraulic trailer jack control 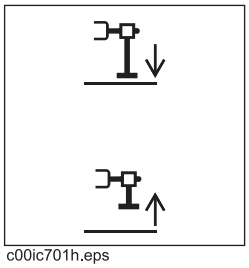 c00ic701h.eps	Push lever down to lower front of trailer. Pull lever up to raise front of trailer.	**IMPORTANT:** Ensure manual trailer jack control is disengaged.
2. Manual trailer jack handle	Turn handle clockwise to lower front of trailer. Turn handle counterclockwise to raise front of trailer.	**IMPORTANT:** • Only use if hydraulic trailer jack control will not work. • Handle is stowed in toolbox.

Prepare

Chapter Contents

Gather Information 44

- Arrange for Traffic Control 44
- Prepare for Working Near Existing Utilities 44
- Plan for Emergency Services 44

Inspect Jobsite 45

Prepare Jobsite 45

Check Supplies and Prepare Equipment 46

- Assemble Accessories 46
- Check Supplies 46
- Prepare Equipment 46

Gather Information

A successful job begins before the excavation. The first step in planning is reviewing information already available about the job and jobsite.

Arrange for Traffic Control

If working near a road or other traffic area, contact local authorities about safety procedures and regulations.

Prepare for Working Near Existing Utilities

If jobsite may contain electrical lines, wear protective boots and gloves meeting the following standards:

- Boots must have high tops and meet the electric hazard protection requirements of ASTM F2413 or ASTM 1117, when tested at 14,000 volts. Tuck legs of pants completely inside boots.
- Gloves must have 17,000 AC maximum use voltage, according to ASTM specification D120.

If working around higher voltage, use gloves and boots with appropriately higher ratings.

Plan for Emergency Services

Have the telephone numbers for local emergency and medical facilities on hand. Check that you will have access to a telephone.

Inspect Jobsite

- Follow U.S. Department of Labor regulations on excavating and trenching (Part 1926, Subpart P) and other similar regulations.
- Contact your local One-Call (811 in USA) or the One-Call referral number (888-258-0808 in USA and Canada) to have underground utilities located before digging. Also contact any utilities that do not participate in the One-Call service.
- Inspect jobsite and perimeter for evidence of underground hazards, such as:
  - "Buried utility" notices
  - Utility facilities without overhead lines
  - Gas or water meters
  - Junction boxes
  - Drop boxes
  - Light poles
  - Manhole covers
  - Sunken ground
- Mark location of all buried utilities and obstructions.

Prepare Jobsite

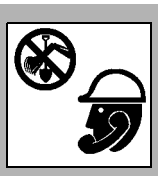

WARNING Jobsite hazards could cause death or serious injury. Use correct equipment and work methods. Use and maintain proper safety equipment.

NOTICE:

- If jobsite classification is in question or if the possibility of unmarked electric utilities exists, classify jobsite as electric.
- Cutting high voltage cable can cause electrocution. Expose lines by hand before digging.
- All vegetation near operator's station must be removed. Contact with trees, shrubs, or weeds during electrical strike could result in electrocution.

Check Supplies and Prepare Equipment

Assemble Accessories

Fire Extinguisher

If required, mount a fire extinguisher near the power unit but away from possible points of ignition. The fire extinguisher should always be classified for both oil and electric fires. It should meet legal and regulatory requirements.

Check Supplies

- water and additional hoses
- fuel
- drilling fluid additives, such as bentonite and polymer
- drilling fluid measurement kit

Prepare Equipment

Fluid Levels

- fuel
- engine oil

Condition and Function

- filters (air, oil)
- tires
- hoses and valves
- couplers and fittings
- water tank
- screens

Transport

Chapter Contents

Lift 48

- Points 48
- Procedure 48

Haul 50

- Inspect Trailer 50
- Operate Jack 50
- Hitch Trailer 51
- Unhitch Trailer 51

Lift

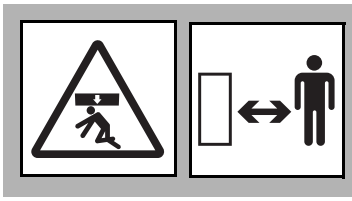

WARNING Crushing weight. If load falls or moves it could kill or crush you. Use proper procedures and equipment or stay away.

Points

Lifting points are identified by lifting decals. Lifting at other points is unsafe and can damage machinery.

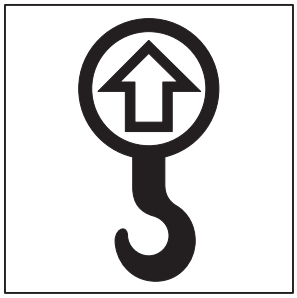

ic1319a.eps

Procedure

Skid

For skid mounted unit, lift only using forklift capable of lifting weight of unit.

Tank

Use crane capable of supporting the equipment's size and weight. See "Specifications" on page 107 or measure and weigh equipment before lifting. Lift mixing tank by attaching lifting devices at lift points and joining at a common lift points.

IMPORTANT: Empty tank before lifting.

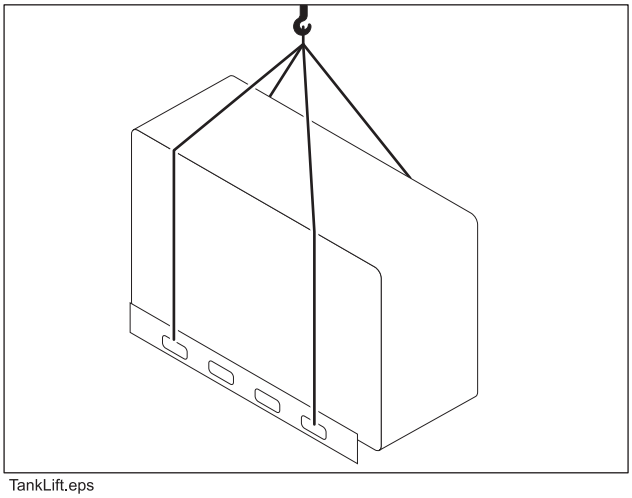

TankLift.eps

Power Unit

Use crane capable of supporting the equipment's size and weight. See “Specifications” on page 107 or measure and weigh equipment before lifting. Lift power unit by attaching lifting device at lift points.

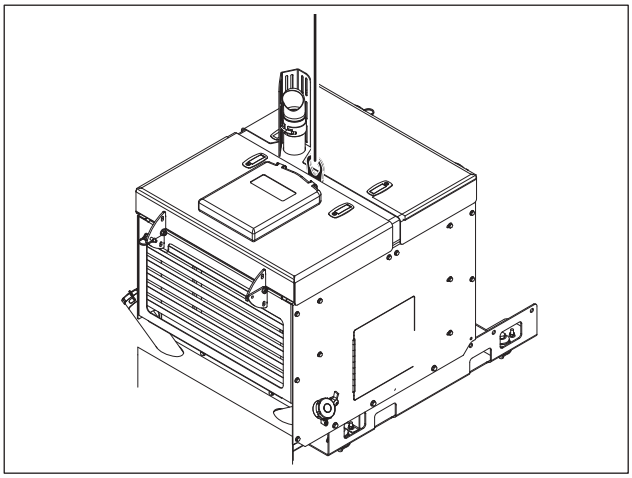

j24om019h.eps

Recycling Unit

Use crane capable of supporting the equipment's size and weight. See “Specifications” on page 107 or measure and weigh equipment before lifting. Lift recycling unit by attaching lifting device at lift point.

IMPORTANT: Empty before lifting.

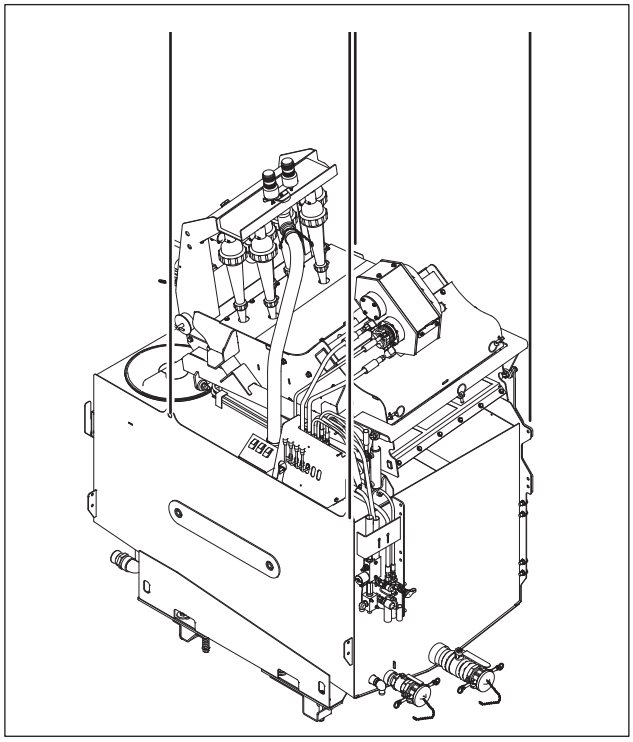

j46om014h.eps

Haul

Inspect Trailer

- Check hitch for wear and cracks. Lubricate if needed.
- Check battery for 12V charge.
- Inspect lights for cleanliness and correct operation. Inspect reflectors and replace if needed.
- Check tire pressure. Check lug nut torque with a torque wrench.
- Ensure trailer brakes are adjusted to come on in synchronization with tow vehicle brakes.
- Check ramps (if equipped) and trailer bed for cracks.

Operate Jack

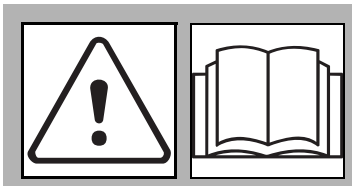

WARNING Incorrect procedures could result in death, injury, or property damage. Learn to use equipment correctly.

To help avoid injury:

- Do not use manual crank to force jack operation. See your dealer if jack binds.
- Use manual crank only when hydraulic power is unavailable.
- Operate the hydraulic motor only when power unit is at half-throttle or less.
- Do not operate jack to the end of screw travel by overextending jack. Use telescoping leg to gain additional height.

Use Telescoping Leg

1. Support trailer tongue.
2. Retract jack.
3. Disengage manual latch on telescoping leg and lower leg. Ensure latch engages.
4. Extend jack.
5. Remove tongue support.

Hitch Trailer

1. Back tow vehicle to trailer.
2. Put manual transmission into first or reverse gear or automatic transmission into park. Turn off ignition. Set parking brake.
3. Connect trailer drawbar, lunette or coupler to tow vehicle hitch and lock in place with lock pin. If needed, adjust drawbar, lunette or coupler height (shown) to level load.
4. Connect safety chains to tow vehicle chain keepers (cross-shaped slots on bumper of tow vehicle). Attach left chain to right side of tow vehicle and vice versa to cradle hitch. Do not connect to pintle hook or hitch ball.
5. Connect breakaway switch cable to tow vehicle. Do not connect to pintle hook or hitch ball.

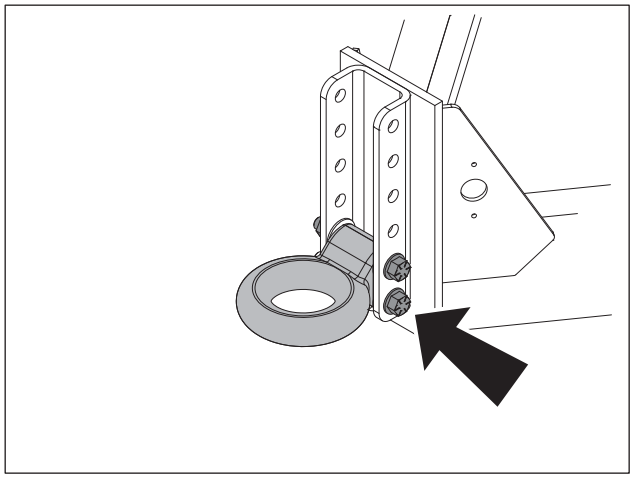

TrailerHitchAdjust_T9.eps

6. Plug trailer electrical connector into tow vehicle connector.
7. Use jack crank to raise jack base and stow.
8. Remove wheel blocks.

Unhitch Trailer

1. Stop tow vehicle and trailer on level ground.
2. Put manual transmission into first or reverse gear or automatic transmission into park. Turn off ignition. Set parking brake.
3. Block trailer wheels.
4. To unhitch trailer from tow vehicle, reverse "Hitch Trailer" steps.

Handle Fluid

Chapter Contents

Mix Fluid 54

- Set Up 54
- Mixing Fluid 54
- Transferring Fluid 55

Recycle Fluid 56

- Set Up 56
- Recycling Fluid 58
- Transferring Fluid 59

Operating in Cold Weather 60

Mix Fluid

Set Up

1. Position fluid unit and connect to drilling unit. See drilling unit operator's manual.

IMPORTANT: Leave unit hitched to towing vehicle or properly stabilized.

2. Block trailer wheels.

Mixing Fluid

WARNING Jobsite hazards could cause death or serious injury. Use correct equipment and work methods. Use and maintain proper safety equipment.

To help avoid injury:

- Wear personal protective equipment including hard hat, safety eye wear, and hearing protection.
- Do not wear jewelry or loose clothing.

CAUTION Improper handling or use of chemicals may result in illness, injury, or equipment damage. Follow instructions on labels and in material safety data sheets (MSDS).

1. Verify that hopper throat is not plugged before mixing.
2. Fill MR90 tank with water. Allow room for additives.
3. Open circulation valve and tank discharge valve.
4. Start engine and run at full throttle.
5. Turn mix/supply pump on.
6. Open mixing hopper valve.

IMPORTANT: Do not open valve unless pump is running and venturi jet valve is open. Fluid could flow back into hopper.

7. Open hopper lid and pour in bentonite. See page 63.

IMPORTANT: Before adding bentonite to drilling fluid, be sure drilling unit is equipped to use a bentonite mixture.

8. Close hopper valve and close hopper lid.
9. Mix well.
10. Add liquid additives directly to MR90 tank.

IMPORTANT: Pumps must be circulating when adding liquid additives.

Transferring Fluid

DANGER Electric shock. Contacting electric lines will cause death or serious injury. Know location of lines and stay away.

To help avoid injury: Keep in mind, if electrical strike occurs while fluid hose is connected to drilling unit, fluid system will also become electrified.

1. Connect hose from mixing pump to drilling unit.
2. Open venturi jet valve and drill supply valve.

IMPORTANT: If drilling fluid contains bentonite, leave jet valve open to allow continuous mixing while drilling.

3. Run engine at full throttle.

Recycle Fluid

Set Up

1. Position fluid unit and connect to drilling unit. See drilling unit operator's manual.

IMPORTANT: Leave unit hitched to towing vehicle or properly stabilized.

2. Block trailer wheels.

Connect Pit Pump

1. Connect hose at 1B and secure other end at 1A.
2. Connect hose at 2B and secure other end at 2A.

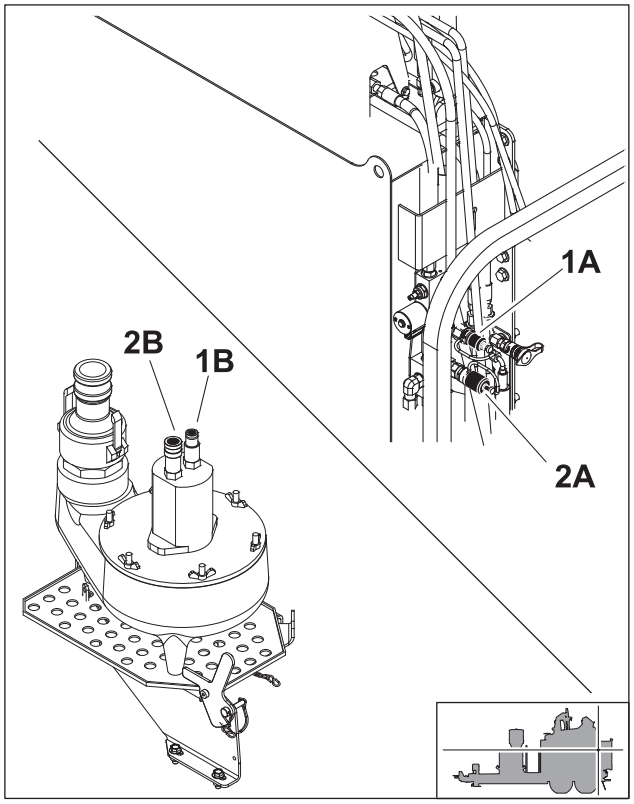

j46om038h.eps

3. Ensure pit pump is not directly on bottom of pit by suspending it in the pit or digging a shelf for it to sit on (shown).

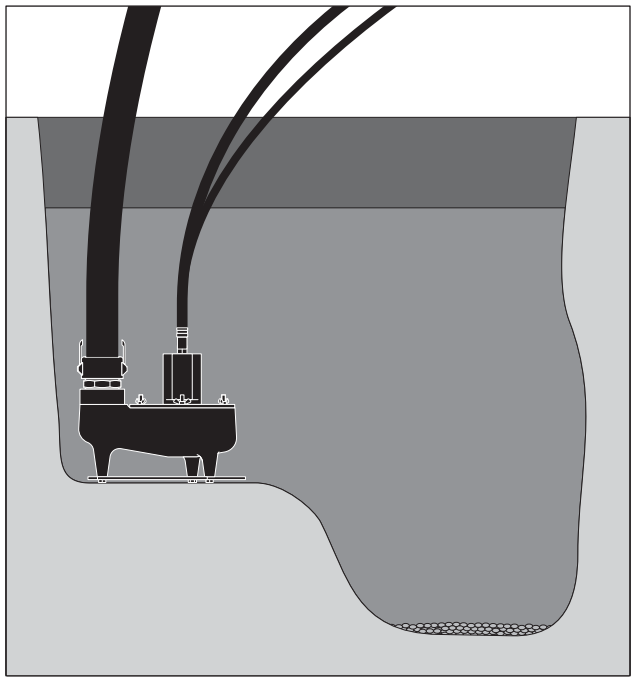

j46om042h.eps

Level Screens

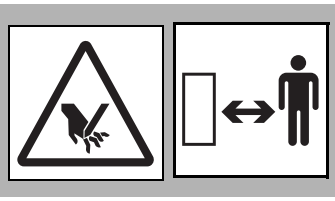

WARNING Moving parts could cut off hand or foot. Stay away.

275-184

To help avoid injury: Ensure area is clear before leveling screens.

Level screens front to rear. See "Screen front/rear tilt control" on page 35.

- A 0° to 3° uphill angle is recommended for most soil types.
- The higher the screen angle, the more time the cuttings have on the screen. This allows the cuttings to become drier before leaving the screens.
- Increased screen angles will produce drier cuttings, but will increase screen wear.

Recycling Fluid

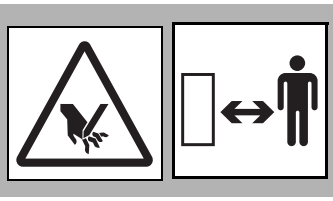

WARNING Moving parts could cut off hand or foot. Stay away.
275-184

To help avoid injury: Ensure area is clear before leveling screens.

1. Level screens left to right. See "Screen left/right tilt control" on page 35.

   IMPORTANT: The screens must always be level from left to right to allow even distribution of liquid across the screen surface.

2. Turn shaker on.
3. Turn on cleaning pump and check that hydrocyclones are operating at 30 psi (2.06 bar).

   IMPORTANT: MR90 tank should be at least half full before turning on cleaning pump.

4. Turn on pit pump to supply used mud to shaker screens.

   IMPORTANT: Use auto mode for pit pump to avoid overflowing MR90 tank. See "Pit pump auto control switch" on page 34.

5. Routinely check mud weight and sand content to prevent damage to drill. See page 68.
6. Level screens front to rear. See "Screen front/rear tilt control" on page 35.

   IMPORTANT:

   - If front of shaker is too high, large amounts of water will exit the shaker with the spoils.
   - Monitor and adjust front/rear screen tilt as soil conditions change.

Transferring Fluid

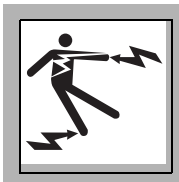

DANGER Electric shock. Contacting electric lines will cause death or serious injury. Know location of lines and stay away.

To help avoid injury: Keep in mind, if electrical strike occurs while fluid hose is connected to drilling unit, fluid system will also become electrified.

1. Connect hose from mixing pump to drilling unit.
2. Open venturi jet valve and drill supply valve.

   IMPORTANT: If drilling fluid contains bentonite, leave jet valve open to allow continuous mixing while drilling.

3. Run engine at full throttle.

Operating in Cold Weather

For successful operation in cold weather, follow these procedures.

- Use mix/supply pump to keep drilling fluid circulating at all times, even during transport to and from the jobsite.
- If possible, use all drilling fluid in MR90 tank before transporting unit.

Systems and Equipment

Chapter Contents

Recommended Products 62

- Guidelines 62
- Polymer 63
- Bentonite 63
- Mixtures 64

Drilling Fluid Requirements 66

Drilling Fluid Measurements 67

- Funnel Viscosity 67
- Mud Weight 68
- Sand Content 69

Screens 70

Recommended Products

CAUTION Improper handling or use of chemicals may result in illness, injury, or equipment damage. Follow instructions on labels and in material safety data sheets (MSDS).

CAUTION Use breathing protection when exposed to silica dust.

270-4952

For productive drilling and equipment protection, use these recommended Baroid® products, available from your Ditch Witch® dealer.

- Soda ash
- Quik-Gel® dry powder bentonite (p/n 259-804)
- Liqui-Trol™ liquid polymer suspension (p/n 259-808)
- Quik-Trol® dry powder polymer (p/n 259-809)
- Bore-Gel® drilling fluid (p/n 259-807)
- E-Z Mud™ Gold dry powder polymer (p/n 255-1012)

Guidelines

Match drilling fluid to soil type. This chart is meant as a guideline only. See your local Ditch Witch dealer for soil conditions and drilling fluid recommendations for your area. Also see our interactive Drilling Fluid Formulator at **www.ditchwitch.com**.

Soil type	Drilling fluid recommendation
smooth, flowing sand	bentonite or Bore-Gel + medium chain polymer
coarse sand or light soil	bentonite or Bore-Gel
heavy clay	medium chain polymer
swelling clay	medium chain polymer
rock	Bore-Gel

Polymer

This drilling fluid additive provides excellent lubrication and increases viscosity in average soils and heavy clay. In swelling clay, polymer can reduce swelling that traps pipe in the bore.

There are two types of polymer:

- long chain such as Baroid® EZ-Mud DP, Ploy Bore

NOTICE: Long chain polymer is not recommended for this unit.

- medium chain such as Baroid Quik-Trol

Bentonite

Bentonite is a dry powder. When properly mixed with water, it forms a thin cake on bore walls, lubricating the bore, keeping it open, and holding fluid in the bore.

Some things to remember when mixing bentonite:

- Use clean water free of salt, calcium, or excessive chlorine.
- Use water with pH level between 9 and 10.
- Use water with hardness of less than 120 ppm.
- Do not use bentonite containing sand.
- Mix bentonite thoroughly or it will settle in tank.
- Do not mix bentonite to a funnel viscosity of over 50.

For information on measuring funnel viscosity, see "Drilling Fluid Measurements" on page 67.

Mixtures

NOTICE: Bentonite does not mix well in water containing polymer. To use both, mix bentonite first, then add polymer.

- If chemicals are added in the wrong order, they will not mix properly and will form clumps.
- If tank contains bentonite/polymer mix and more drilling fluid is needed, completely empty tank and start with fresh water before mixing another batch.

General mixing order

1. Soda ash
2. Bentonite
3. Polymer

Bore-Gel® contains premixed bentonite, polymer, and soda ash. Follow guidelines below to ensure proper drilling fluid viscosity for expected drilling conditions.

Conditions	Amount to Use	
normal drilling	15 lb/100 gal	7 kg/380 L
sand or gravel	up to 45 lb/100 gal	up to 21 kg/380 L
rock	up to 50 lb/100 gal	up to 23 kg/380

Basic Fluid Recipes

Soil type	Mixture/100 gal (378 L) of water	Notes
fine sand	35 lb (16 kg) Bore-Gel	
coarse sand	35 lb (16 kg) Bore-Gel .5 lb (225 g) No-Sag	Add .5 lb (225 g) of Quik-Trol for additional filtrate control
fine sand below water table	40 lb (18 kg) Bore-Gel .75 lb (340 g) Quik-Trol	Add .5 - 1 gal (2-4 L) of Dinomul in high torque situations
coarse sand below water table	40 lb (18 kg) Bore-Gel .75 lb (340 g) Quik-Trol .75 lb (340 g) No-Sag	Add .5 - 1 gal (2-4 L) of Dinomul in high torque situations
gravel	50 lb (23 kg) Bore-Gel .75 lb (340 g) Quik-Trol .75 lb (340 g) No-Sag	Add .5 lb (225 g) of Barolift to reduce loss of returns
cobble	50 lb (23 kg) Bore-Gel .75 lb (340 g) Quik-Trol .75 lb (340 g) No-Sag	Add .5 lb (225 g) of Barolift to reduce loss of returns
sand, gravel, clay or shale	35 - 40 lb (16-18 kg) Bore-Gel .5lb (227 g) EZ-Mud Gold	Vary mixture according to percentage of sand and clay
clay	.5 lb (225 g) EZ- Mud Gold	Flow rate should be 3-5 parts fluid to 1 part soil.
swelling/sticky clay	.75 - 1 lb (340-450 g) EZ-Mud Gold	Flow rate should be 3-5 parts fluid to 1 part soil.
solid rock (shale)	40 lb (18 kg) Bore-Gel	Use .5 pt (235 mL) of No Sag for large diameter or longer bores
solid rock (other than shale)	40 - 50 lb (18-23 kg) Bore-Gel	Use .5 pt (235 mL) of EZ-Mud in reactive shales
rock/clay mixture	40 - 50 lb (18-23 kg) Bore-Gel .5 lb (227 g) EZ-Mud Gold	
rock/sand mixture	40 - 50 lb (18-23 kg) Bore-Gel	Use .5 pt (235 mL) of No Sag for large diameter or longer bores
fractured rock	50 lb (23 kg) Bore-Gel .5 - 1lb (225-450 g) No-Sag	Use .5 lb (225 g) of Barolift to reduce fluid loss to formation

Drilling Fluid Requirements

1. Determine drilling conditions and choose appropriate drilling fluid mix.
2. Estimate amount of supplies needed and check availability.
    - Drilling fluid
    - Water supply. If more water than can be carried with the unit will be needed, arrange to transport additional water.
    - Bentonite and/or polymer
3. Check water quality.
    - Use meter or pH test strips to test pH of water. If pH is below 9.0, add 1 lb (454 g) soda ash per tank. Test and repeat until pH is between 9 and 10.
    - Check water hardness using hardness test strips. Treat with soda ash if hardness exceeds 125 ppm.

Drilling Fluid Measurements

Fluid measurements are important in ensuring the drilling system functions correctly. The viscosity, mud weight, and sand content of drilling fluids must be controlled and can be measured using the drilling fluid test kit (p/n 191-158), available from your Ditch Witch® dealer.

Funnel Viscosity

Viscosity is the measure of internal resistance of a fluid to flow; the greater the resistance, the higher the viscosity.

To determine viscosity, you will need the Marsh funnel and measuring cup in your drilling fluid test kit.

IMPORTANT: Make sure Marsh funnel is clean and free of obstruction and that you have a stopwatch available for timing the viscosity.

1. Using wash hose and a clean container, take a fresh sample of drilling fluid. The sample must be at least 1.5 qt (1.4 L).
2. With finger over bottom of funnel, fill with fluid from the container through the screen until fluid reaches the bottom of the screen.
3. Move funnel over 1 qt (.95 L) container.
4. Remove finger from bottom of funnel and use the stopwatch to count the number of seconds it takes for 1 qt (.95 L) of fluid to pass through the funnel. The number of seconds is the viscosity.
5. Thoroughly rinse measuring cup and Marsh funnel.

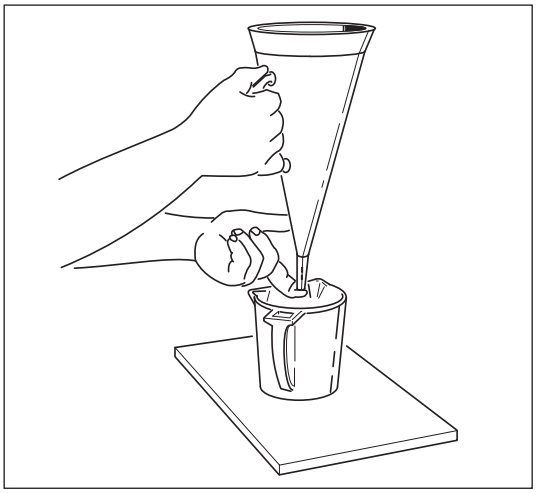

j07om033c.eps

Mud Weight

The density of a given liquid is the mud weight.

To determine mud weight, you will need the mud balance and scale in your drilling fluid test kit (p/n 191-158), available from your Ditch Witch® dealer.

IMPORTANT: Make sure all pieces of mud weight kit are clean and free of obstruction before measuring drilling fluid.

1. Place mud balance base on level surface.
2. Fill the cup to the top with mud sample to be weighed. See "Fluid sample valve" on page 31.
3. Secure the lid on the cup.

IMPORTANT: Mud should be expelled through the hole in the lid to ensure cup is full and any trapped air is freed from the cup.

4. Cover the hole in the cap with a finger and wash all mud from outside of the cup.
5. Place balance on the scale and slide rider along the arm until the level bubble indicates the scale is level. The mud weight of the drilling fluid is the number indicated by the scale.
6. Thoroughly rinse mud weight cup and scale.

Results

Mud weight in excess of 9.75 lb per gallon (1.16 kg/L) is not recommended and may cause damage to the machine.

If mud weight is too high:

- Check screens for holes and/or proper installation
- Check that hydrocyclones are working properly
- Check that pressure to hydrocyclones is correct
- Check y-strainer for obstructions
- Install finer screens if necessary
- Drain system and start with new water

Sand Content

Sand content is measured by determining the volume percent of sand-sized particles present in the drilling fluid.

To determine sand content, you will need the sand content tube, wash bottle, screen, and funnel in your drilling fluid test kit.

IMPORTANT: Make sure sand content kit components are clean and free of obstruction before measuring drilling fluid.

1. Fill sand content tube to the indicated mark with mud sample. See "Fluid sample valve" on page 31.
2. Use wash bottle to add water to the next mark.
3. Close tube and shake vigorously.
4. Pour mixture onto clean screen. Discard liquid passing through the screen.
5. Repeat steps 2-4 until all drilling fluid has been washed out of the tube.
6. Place funnel upside down over top of screen.
7. Slowly invert the assembly and insert the tip of the funnel into the mouth of the measuring tube.
8. Wash sand into measuring tube with wash bottle and allow sand to settle. The volume percent of sand is measured using the scale on the side of the measuring tube.
9. Thoroughly rinse all components of the sand content kit.

Results

Sand content in excess of 0.5% can cause excessive wear and damage to the machine.

If sand content is too high:

- Check screens for holes or improper installation
- Check that hydrocyclones are working properly
- Check that pressure to hydrocyclones is correct
- Check y-strainer for obstructions
- Install finer screens if necessary
- Drain system and start with new water

Screens

Use the chart below to determine which set of screens will work best for the soil type at the jobsite.

Description	Soil Type	P/N	Micron
standard fine screen set	clay, silt, loam	301-7191	165
		301-7192	70
standard medium screen set	clay, sand, loam, rock	301-7189	225
		301-7190	88

* for very coarse or very fine soil, contact your Ditch Witch® dealer

Standard medium screen set can be used for most soil types. If medium screen set is used and fluid must be changed too frequently, switch to fine screen set.

Complete the Job

Chapter Contents

Dispose of Fluid 72

Rinse Equipment 72

Disconnect 74

Stow Tools 74

Storage. 74

Antifreeze Unit. 75

Dispose of Fluid

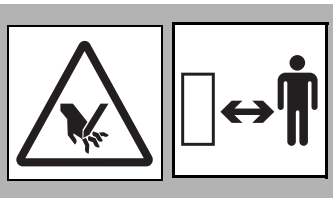

WARNING Moving parts could cut off hand or foot. Stay away. 275-184

To help avoid injury: Never place hands through spoils door unless engine is off and battery is disconnected.

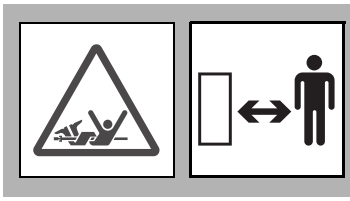

DANGER Rotating shaft will cause death or serious injury. Stay away. 270-1506

To help avoid injury: Leave cover on spoils hopper.

Dispose of unneeded fluid and waste products using one of the methods described below.

1. Hook vacuum unit directly to MR90 connectors.
   - Connect at 1 to drain clean side tank.
   - Connect at 2 to drain dirty side tank.
   - Connect at 3 to drain optional spoils hopper.
2. Open optional spoils hopper door to dump waste products. See "Spoils hopper door control (optional)" on page 36.

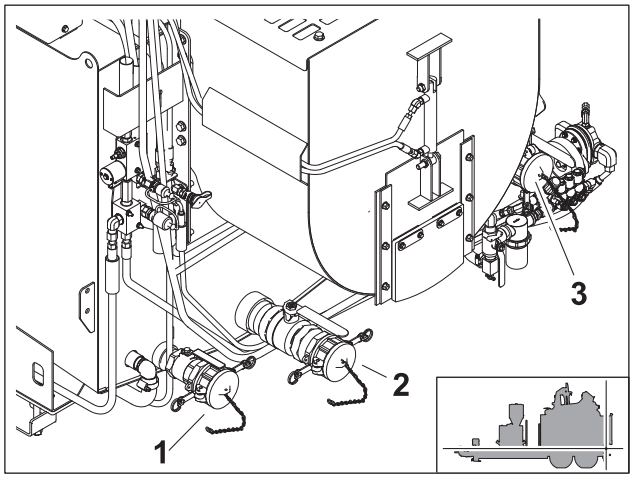

j46om044h.eps

IMPORTANT:

- Some areas may have regulations regarding the disposal of waste products. Consult local regulations.
- If a gelling agent is required, Baroid® IDP-428 is recommended.

Rinse Equipment

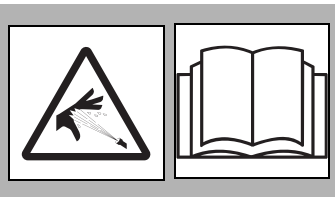

WARNING Pressurized fluid or air could pierce skin and cause severe injury. Refer to operator's manual for proper use. 270-6035

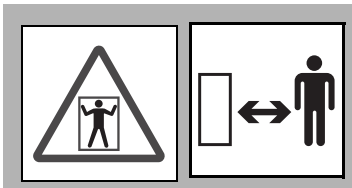

DANGER Confined space will cause suffocation. Use proper procedures for entering or stay away. 273-200

To help avoid injury: Enter tank only if necessary. Follow U.S. Department of Labor guidelines for entering confined spaces.

Spray water onto equipment to remove dirt and mud. Hose reel is equipped with a handle restraint (shown).

- Pull latch forward and lift handle up to release.
- Pull latch forward and push handle down to secure.

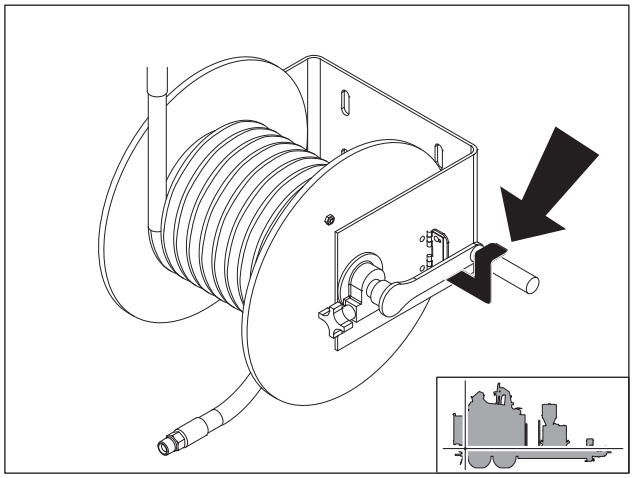

j46om037h.eps

Disconnect

Disconnect and store hoses and cables.

Stow Tools

Make sure hoses, drilling fluid measurement kit, and other tools are properly stowed.

Stow pit pump as shown.

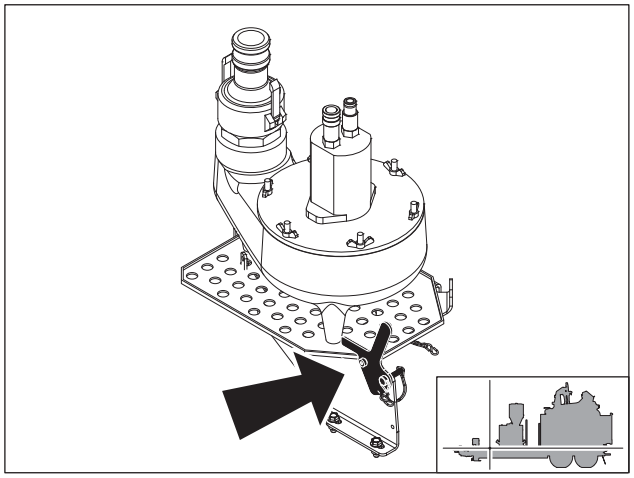

j46om036h.eps

Storage

Drain tank and ensure all fluid system valves are open. Also open drain valve on pump.

Antifreeze Unit

Follow these steps for overnight or long-term storage of unit during cold weather.

- Open all valves to 45°.
- Remove all caps from connectors.

Fresh Water Tank

1. Drain antifreeze valve and water drain valve. See "Valves" on page 31.
2. Position antifreeze valve down to allow antifreeze to enter water pump.
3. Turn water pump on until antifreeze is circulated through wash hose.
4. Turn water pump off.

MR90 Tank

1. Properly dispose of fluid.
2. Drain spoils hopper drain valve, dirty side tank drain valve, and clean side tank drain valve. See "Valves" on page 31.
3. Disconnect hoses (shown) from MR90 tank end.

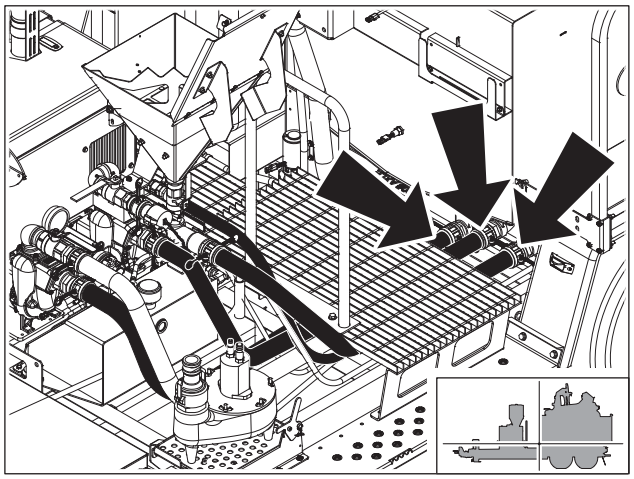

j46om055h.eps

4. Disconnect circulating jet hose and lay to the side.

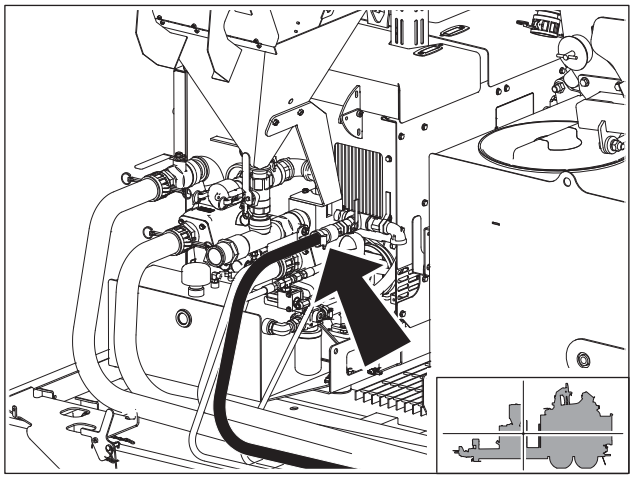

j46om056h.eps

5. Open pump drain valve on both sides.

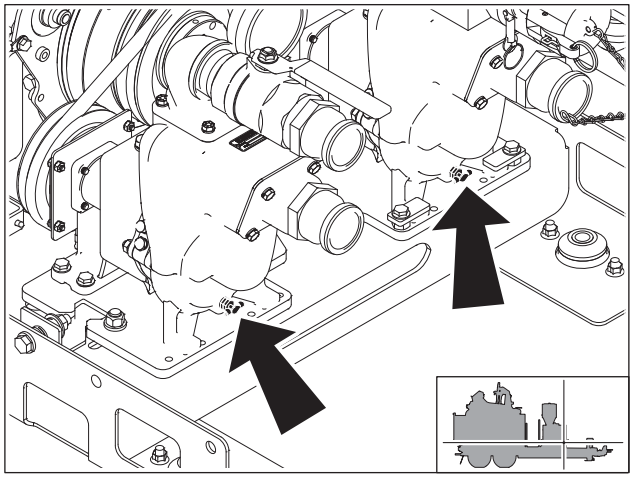

j46om054h.eps

Service

Chapter Contents

Service Precautions 78

- Welding Precaution 78
- Washing Precaution 78

Recommended Lubricants/Service Key 79

- Engine Oil Temperature Chart 80
- Approved Coolant 80
- Approved Fuel. 81

10 Hour 82

50 Hour 88

100 Hour 90

150 Hour 91

300 Hour 93

450 Hour 94

900 Hour 96

1800 Hour 96

As Needed 97

200 Mile 102

3000 Mile 103

12,000 Mile. 104

Service Precautions

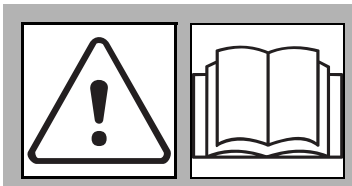

WARNING Incorrect procedures could result in death, injury, or property damage. Learn to use equipment correctly.

To help avoid injury:

- Unless otherwise instructed, all service should be performed with engine off.
- Refer to engine manufacturer's manual for engine maintenance instructions.

Welding Precaution

NOTICE: Welding can damage electronics.

- Welding currents can damage electronic components. Connect welder ground close to welding point and make sure no electronic components are in the ground path.
- Disconnect battery at battery disconnect switch before welding to prevent damage to battery.
- Do not turn off battery disconnect switch with engine running, or alternator and other electronic devices may be damaged.

Washing Precaution

NOTICE: Water can damage electronics. When cleaning equipment, do not spray electrical components with water.

Recommended Lubricants/Service Key

Item	Description		
DEO	**U.S., Canada, EU, Japan:** Diesel engine oil meeting or exceeding API service classification CH-4 (CH-4, CI-4, or CJ-4) or ACEA E7 (E6, E7, or E9). See viscosity chart.		
DEO	**Less regulated markets (outside the U.S., Canada, EU, Japan):** Diesel engine oil compatible with the sulfur content of the fuel used. If the fuel sulfur content exceeds 500 ppm (500 mg/kg) the oil's base number (TBN) should exceed 10. If the fuel sulfur content exceeds 5000 ppm (5000 mg/kg) the oil change interval should be reduced to every 75 hours. See viscosity chart.		
DEAC	Low silicate, fully formulated diesel engine antifreeze/coolant meeting ASTM D6210.		
MPG	Multipurpose grease meeting ASTM D217 and NLGI 1		
THF	Tractor hydraulic fluid, similar to Phillips 66® HG, Mobilfluid® 423, Chevron® Tractor Hydraulic Fluid, Texaco® TDH Oil, or equivalent		
NDO	30W non-detergent oil		
MPL	Multipurpose gear oil meeting API service classification GL-5 (SAE 80W90)		
	Check level of fluid or lubricant		Check condition
	Filter		Change, replace, adjust, service or test

Proper lubrication and maintenance protects Ditch Witch® equipment from damage and failure. Service intervals listed are for minimum requirements. In extreme conditions, service machine more frequently. Use only genuine Ditch Witch parts, filters, approved lubricants, TJC, and approved coolants to maintain warranty. Fill to capacities listed in "Specifications" on page 107.

For more information on engine lubrication and maintenance, see your engine manual.

IMPORTANT: Use the "Service Record" on page 117 to record all required service to your machine.

Engine Oil Temperature Chart

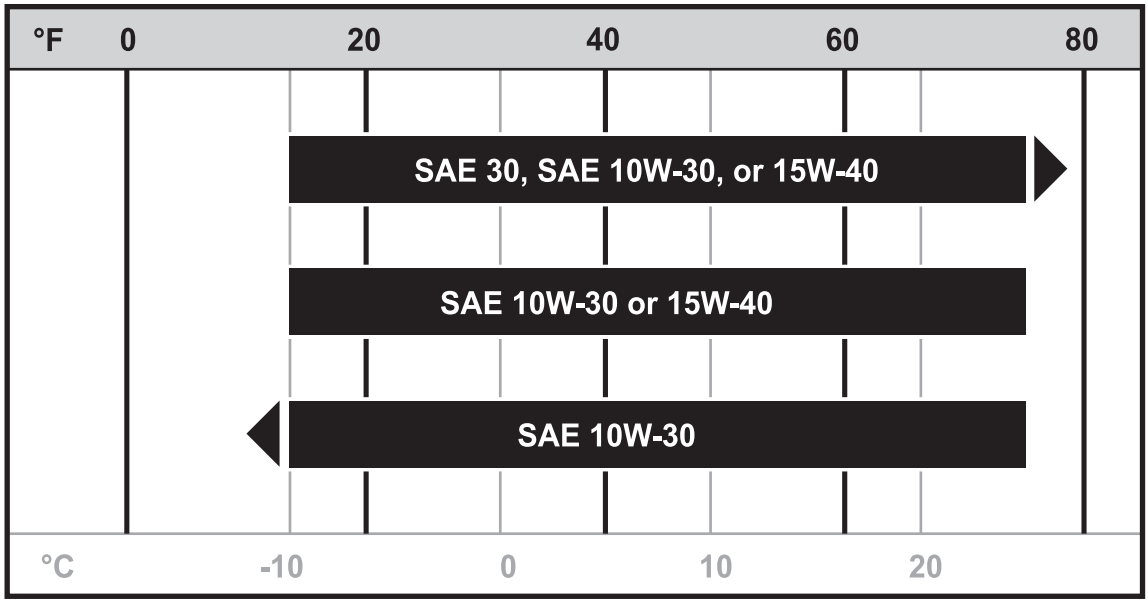

j46om045h.eps

Temperature range anticipated before next oil change

Approved Coolant

This unit was filled with John Deere Cool-Gard II coolant before shipment from factory. Add only John Deere Cool-Gard II (p/n 255-006) or any fully formulated, ethylene glycol based, low-silicate, heavy-duty diesel engine coolant meeting ASTM specification D6210.

NOTICE:

- Use only pre-diluted coolant or concentrated coolant mixed with distilled water. Do not use tap water.
- Do not use water or high-silicate automotive-type coolant. This will lead to engine damage or premature engine failure.
- Do not mix heavy-duty diesel engine coolant and automotive-type coolant. This will lead to coolant breakdown and engine damage.

Approved Fuel

U.S., Canada, EU, and Japan

⚠WARNING Avoid static electricity when fueling. Ultra Low Sulfur Diesel (ULSD) poses a greater static ignition hazard than earlier diesel formulations. Avoid death or serious injury from fire or explosion. Consult with your fuel system supplier to ensure the delivery system is in compliance with fueling standards for proper grounding and bonding practices.

This engine is designed to run on diesel fuel. Use only high quality fuel meeting ASTM D975 No. 2D, EN590, or equivalent. At temperatures below 32°F (0°C) winter fuel blends are acceptable. See the engine operation manual for more information.

NOTICE: Use only Ultra Low Sulfur Diesel (less than 15ppm sulfur content in US and Canada or 10 mg/kg sulfur content in Japan) in this unit. Operating with higher sulfur content will damage the engine and aftertreatment device.

Biodiesel blends up to 5% (B5) are approved for use in this unit. The fuel used must meet the specifications for diesel fuel shown above. In certain markets, higher blends may be used if certain steps are taken. Extra attention is needed when using biodiesel, especially when operating in cold weather or storing fuel. Contact your Ditch Witch dealer or the engine manufacturer for more information.

Less Regulated Markets (Outside the U.S., Canada, EU, and Japan)

This engine is designed to run on diesel fuel. Use only high quality fuel meeting ASTM D975 No. 2D, EN590, or equivalent. At temperatures below 32°F (0°C) winter fuel blends are acceptable. See the engine operation manual for more information.

IMPORTANT: Fuel sulfur content should be less than 10,000 ppm (10,000 mg/kg). Worldwide, fuel sulfur regulations vary widely. Fuel used should always comply with local regulations. Prior to shipping, this unit was filled with API CJ-4 DEO. If operating fuel with sulfur content above 500 ppm (500 mg/kg), change oil initially at 75 hours.

Biodiesel blends up to 5% (B5) are approved for use in this unit. The fuel used must meet the specifications for diesel fuel shown above. In certain markets, higher blends may be used if certain steps are taken. Extra attention is needed when using biodiesel, especially when operating in cold weather or storing fuel. Contact your Ditch Witch dealer or the engine manufacturer for more information.

10 Hour

Location	Task	Notes
Recycling Unit	Clean screens	
	Clean Y-strainer	
	Clean pit pump	
	Check coolant level	DEAC
	Check engine oil level	DEO
	Check water pump oil level	NDO
	Clean water pump filter	
	Check radiator	
	Check hydraulic hoses	
Trailer	Check tire pressure and lug nut torque	80 psi (5.5 bar)/90-120 ft•lb (122-163 N•m)
	Check tail lights and reflectors	
	Check hitch bolts	

Recycling Unit

Clean Screens

⚠ WARNING Pressurized fluid or air could pierce skin and cause severe injury. Refer to operator's manual for proper use. 270-6035

Clean screens every 10 hours, after each use, and as needed.

1. Pin access flaps (3) back to expose screens.
2. Spray screens (1,2) with wash wand to ensure they are free from dirt and debris.

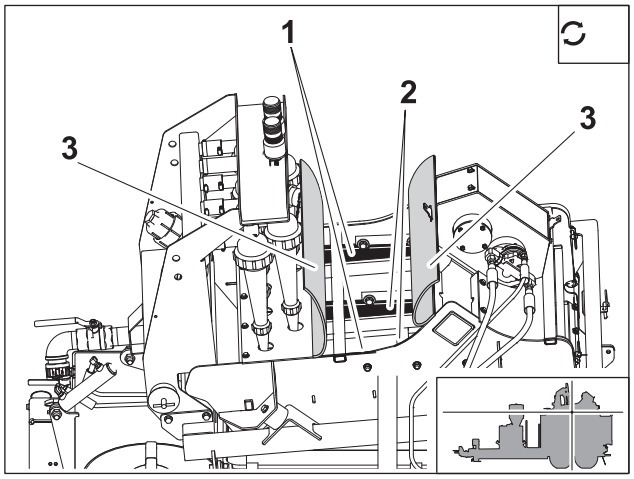

j46om033h.eps

IMPORTANT: Placing wash wand directly on screen will damage it.

Clean Y-Strainer

Remove Y-strainer and clean every 10 hours.

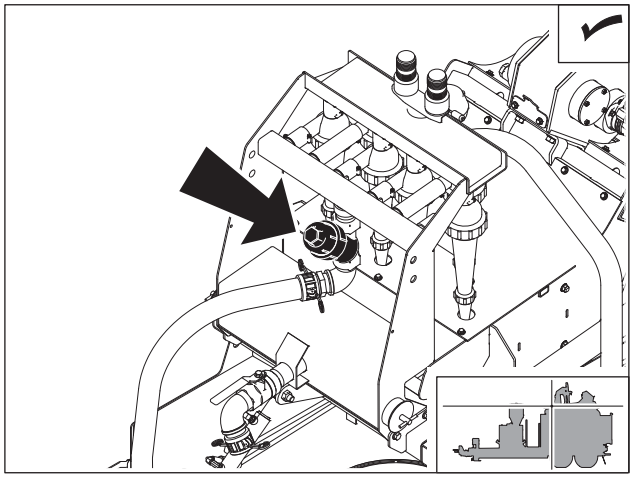

j46om034h.eps

Clean Pit Pump

Spray pit pump with wash wand every 10 hours or after each use.

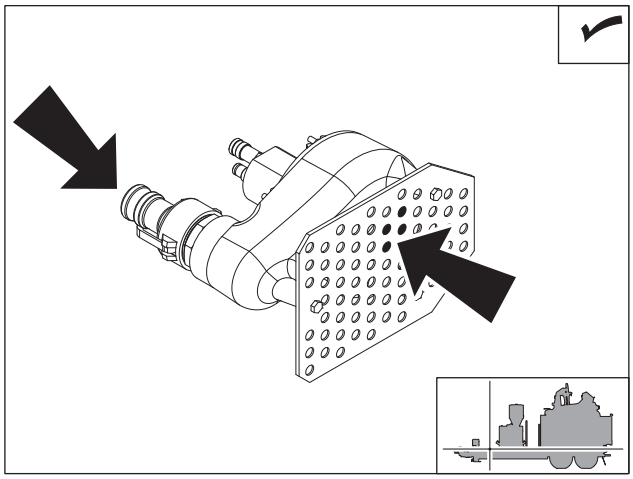

j46om035h.eps

Check Coolant Level

Check coolant level every 10 hours. Add coolant at cap (shown) as needed to maintain level between LOW and FULL on overflow tank.

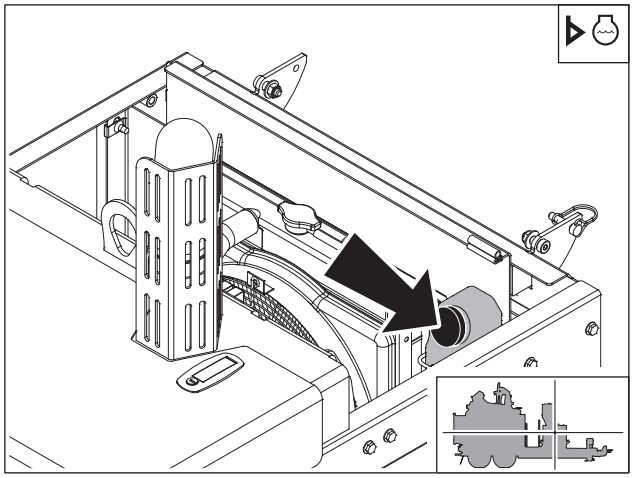

j46om015h.eps

Check Engine Oil Level

Check engine oil level at dipstick (1) every 10 hours. Add DEO at fill (2) as needed to maintain oil level at highest line on dipstick. See "Approved Coolant" on page 80.

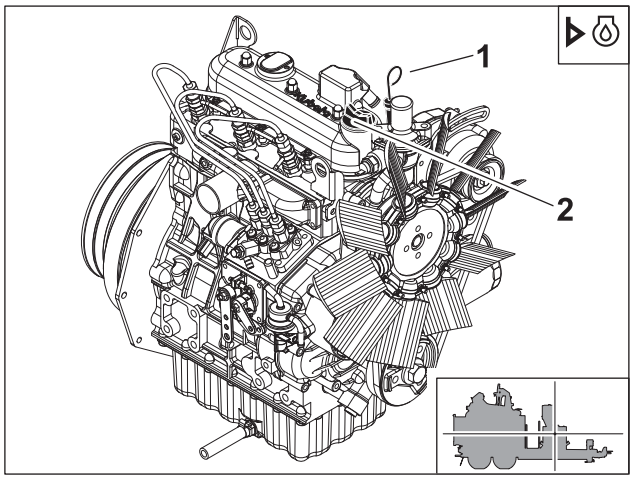

j46om016h.eps

Check Water Pump Oil Level

With frame level, check water pump oil at sight glass (2) every 10 hours. Add NDO at fill (1) as necessary to keep oil at halfway mark on sight glass.

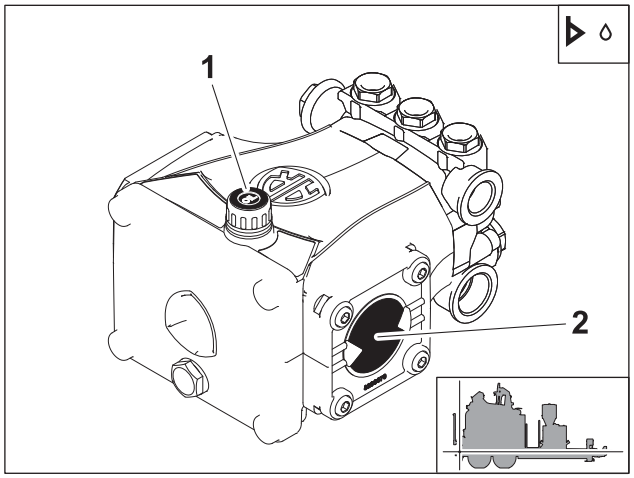

j46om004h.eps

Clean Water Pump Filter

Clean water pump filter every 10 hours and replace as needed.

1. Open filter housing.
2. Remove element and rinse housing thoroughly with water.
3. Inspect element for signs of collapse and for brittle or broken rubber seals on the ends of the element. Replace as needed.
4. Replace element and close filter housing.

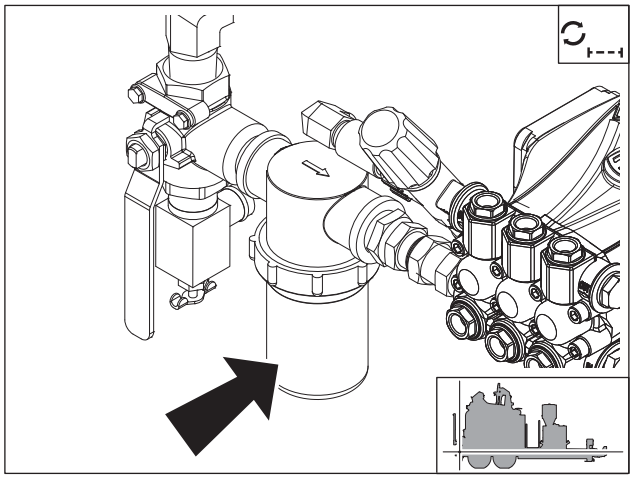

j46om005h.eps

Check Radiator

Check radiator for dirt, grass, and other foreign matter every 10 hours. Clean out with compressed air or spray wash if required. Be careful not to damage fins with high-pressure air or water. Check more often if operating in dusty or grassy conditions.

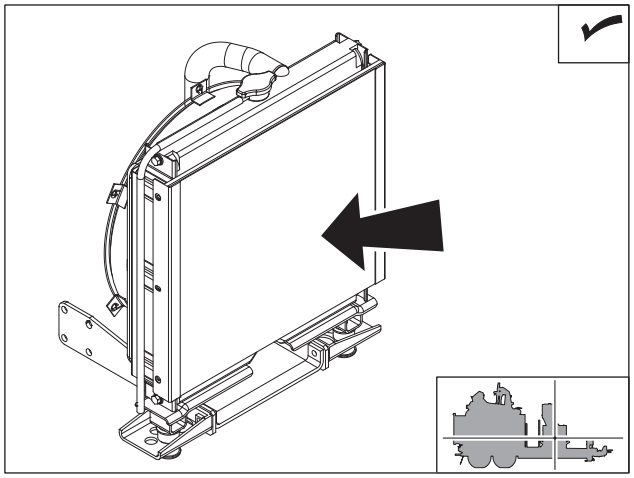

j46om020h.eps

Check Hydraulic Hoses

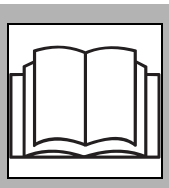

WARNING Pressurized fluid or air could pierce skin and cause severe injury. Refer to operator's manual for proper use. 270-6035

To help avoid injury:

- Before disconnecting a hydraulic line, turn engine off and operate all controls to relieve pressure. Lower, block, or support any raised component with a hoist. Cover connection with heavy cloth and loosen connector nut slightly to relieve residual pressure. Catch all fluid in a container.
- Before using system, check that all connections are tight and all lines are undamaged.
- Use a piece of cardboard or wood, rather than hands, to search for leaks.
- Wear protective clothing, including gloves and eye protection.
- If you are injured, seek immediate medical attention from a doctor familiar with this type of injury.

Check hydraulic hoses for leaks at startup and every 10 hours.

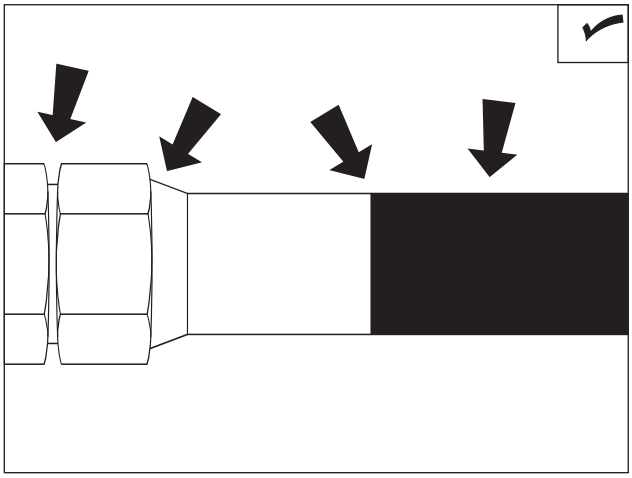

CheckHoses.eps

Trailer

Check Trailer Tire Pressure and Lug Nut Torque

Check tire pressure (2) and lug nut (1) torque every ten hours. See below for correct pressure and torque. To verify trailer model, see the certification plate located on the trailer tongue.

Trailer	Pressure	Torque
T14R	80 psi (5.5 bar)	90-120 ft•lb (122-163 N•m)

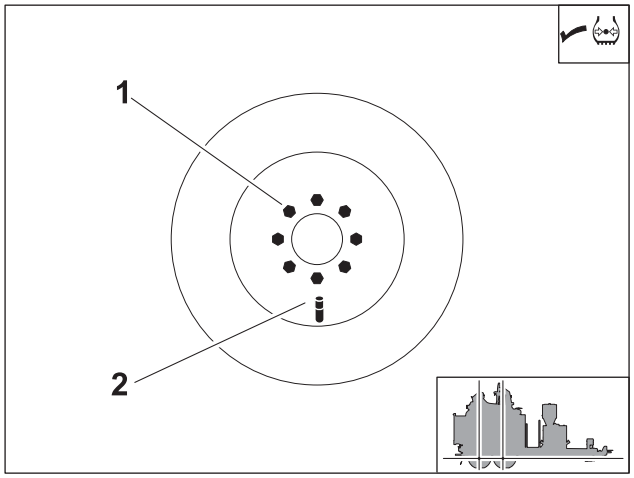

j46om046h.eps

Check Trailer Lights and Reflectors

Check lights and reflectors for correct operation and cleanliness every 10 hours.

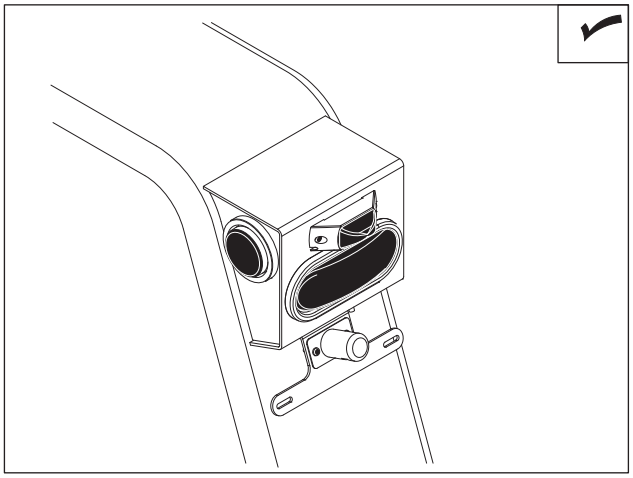
j33om013h.eps

Check Hitch Bolts

Check torque of trailer hitch bolts every 10 hours. Bolts should be torqued to 260 ft•lb (352 N•m).

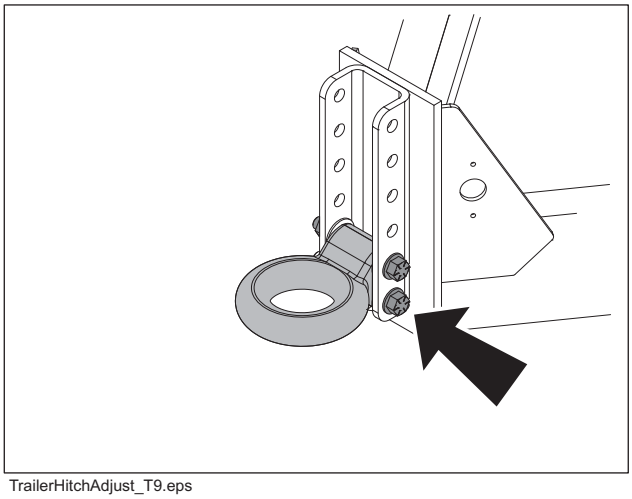
TrailerHitchAdjust_T9.eps

50 Hour

Location	Task	Notes
Recycling Unit	Change water pump oil	Initial, NDO
	Check air filter	
	Change engine oil and filter	Initial, DEO
	Lube pump	
	Change shaker gearbox oil	MPL
	Change hydraulic fluid filter	initial

Recycling Unit

Change Water Pump Oil

Change oil after the first 50 hours of operation initially, and every 450 hours thereafter. Change oil more frequently if working in dusty conditions.

1. Drain at plug (3) while oil is warm.
2. Add approximately 1 qt (.95 L) NDO at fill (1) until oil is at halfway mark on sight glass (2).

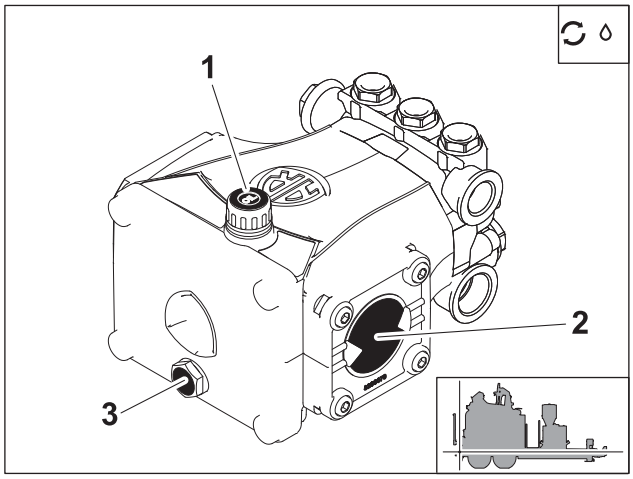

j46om003h.eps

Check Air Filter

Check air filter every 50 hours. Replace as needed.

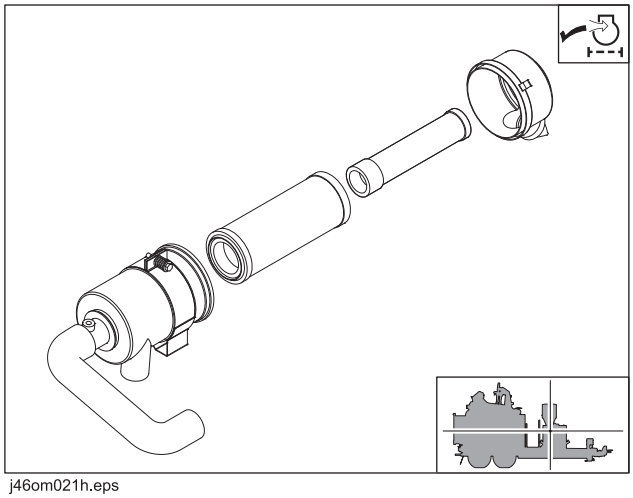

j46om021h.eps

Change Engine Oil and Filter (Initial)

Change engine oil after the first 50 hours and every 150 hours thereafter, while oil is warm and with unit parked on level ground.

1. Open drain (3).
2. Replace filter (4).
3. Close drain.
4. Add approximately 4.2 qt (4 L) DEO at fill (2) until oil level is at highest line on dipstick (1).

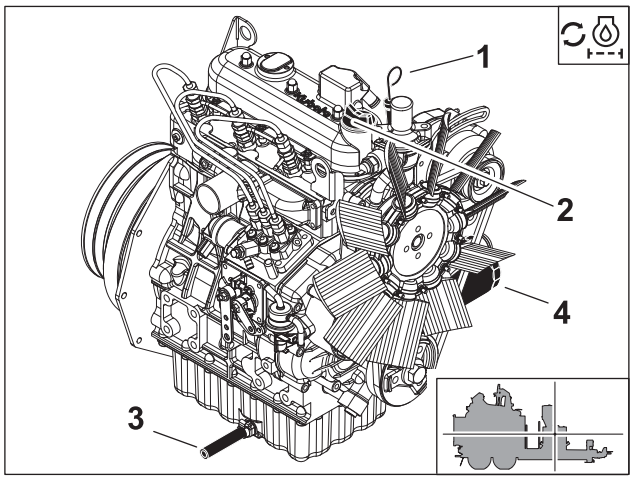

j46om017h.eps

Lube Pump

Lube zerk (2) with MPG every 50 hours. Grease cavity is full when grease escapes from grease cylinder relief valve (1).

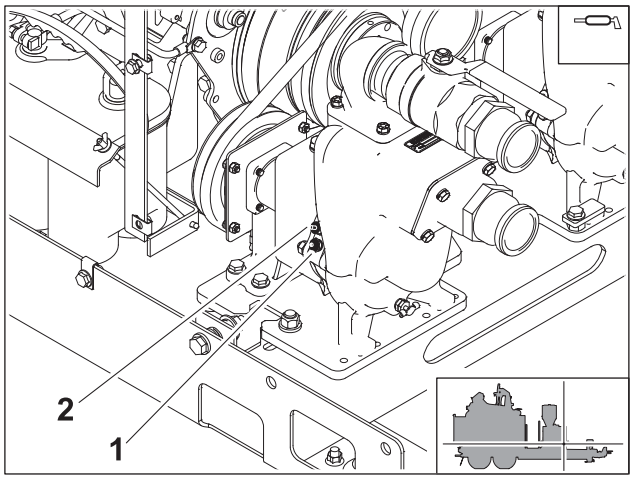

j46om029h.eps

Change Shaker Gearbox Oil

Change shaker gearbox oil after the first 50 hours and every 450 hours thereafter.

To change:

1. Remove drain plug (2).
2. Drain oil and replace plug.
3. Add MPL at fill (1) until cold oil is halfway up sight glass (3).

NOTICE:

- Fill capacity is 2.4 pt (1L). Do not overfill.
- Do not drain oil from gearbox when hot. Let gearbox cool before removing drain plug.

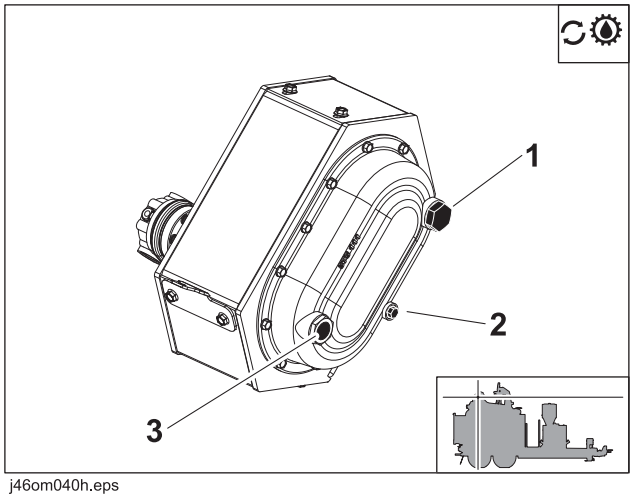

j46om040h.eps

Change Hydraulic Fluid Filter

Replace hydraulic fluid filter (shown) after the first 50 hours, and every 900 hours thereafter.

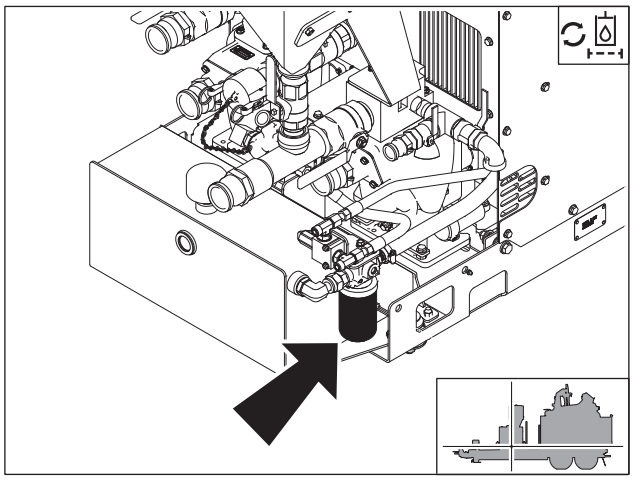

j46om048h.eps

100 Hour

Trailer

Lube Jack

Lower jack halfway and lube both zerks (shown) with 15-20 shots of MPG every 100 hours. Extend and retract jack fully using the manual crank to check for binding. If jack binds, replace it.

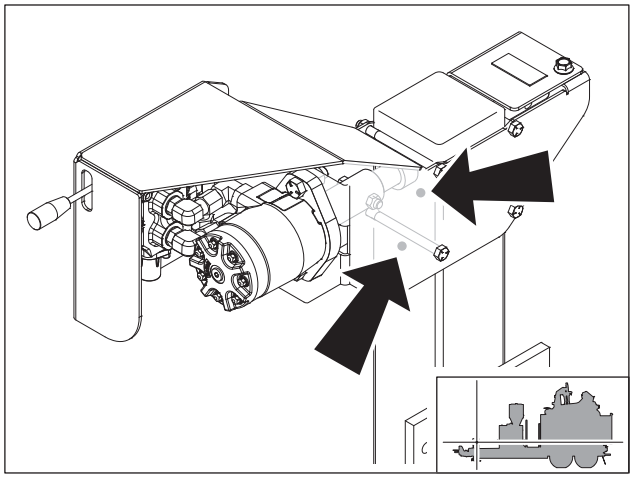

j46om057h.eps

150 Hour

Location	Task	Notes
Recycling Unit	Change fuel filters	
	Check fan belt tension	
	Change engine oil and filter	

Recycling Unit

Change Fuel Filters

Change fuel filter (1) and in-line fuel filter (2) every 150 hours.

1. Remove filters.
2. Fill new filter with clean fuel.
3. Apply fuel oil over the gasket and hand-tighten.

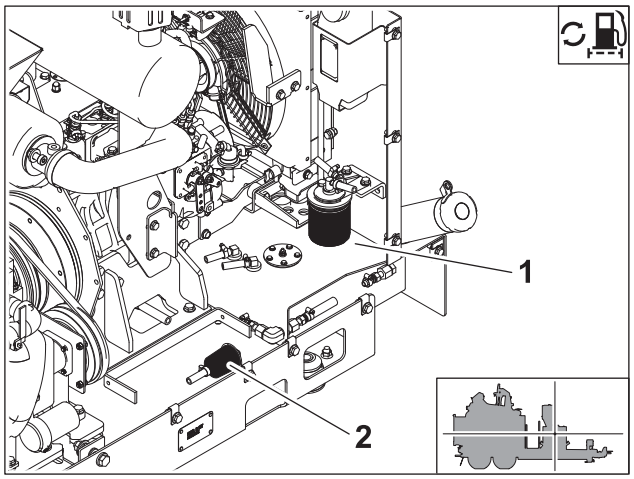

j46om018h.eps

Check Fan Belt Tension

Check fan belt tension every 150 hours.

1. Turn off engine and remove key.
2. Apply moderate thumb pressure to top of belt.

   Belt is properly tensioned when deflection (A) is 1/4-1/2" (5-13 mm). To adjust, see page 97.

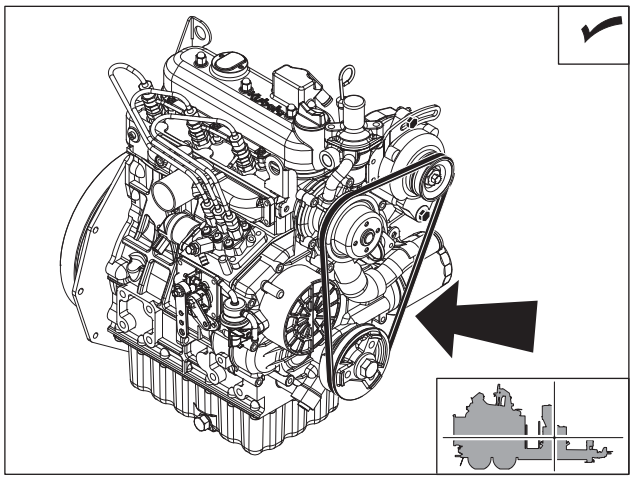
j46om023h.eps

Change Engine Oil and Filter

Change engine oil every 150 hours while oil is warm and with unit parked on level ground.

1. Open drain (3).
2. Drain crankcase while oil is warm.
3. Replace filter (4).
4. Close drain.
5. Add approximately 4.2 qt (4 L) DEO at fill (2) until oil level is at highest line on dipstick (1).

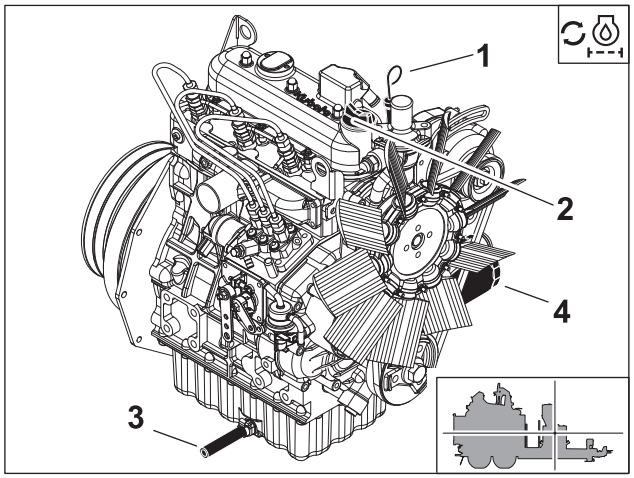

j46om017h.eps

300 Hour

Location	Task	Notes
Recycling Unit	Change air filter	

Recyling Unit

Change Air Filter

Change air filter every 300 hours.

1. Open air filter housing at latches (1).
2. Remove primary (3) and secondary (2) elements.
3. Wipe inside of housing and wash end cap.
4. Insert new primary and secondary elements.
5. Close air filter case.

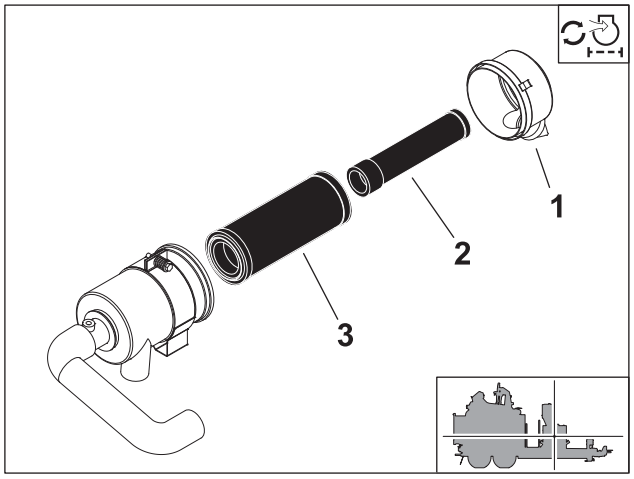

j46om024h.eps

450 Hour

Location	Task	Notes
Recycling Unit	Replace fan belt	
	Replace pump drive belt	
	Change water pump oil	NDO
	Change shaker gearbox oil	MPL

Recycling Unit

Replace Fan Belt

Replace fan belt (shown) every 450 hours.

To replace

1. Loosen bolts (1, 2) and remove belt.
2. Install new belt and adjust properly. See page 97.

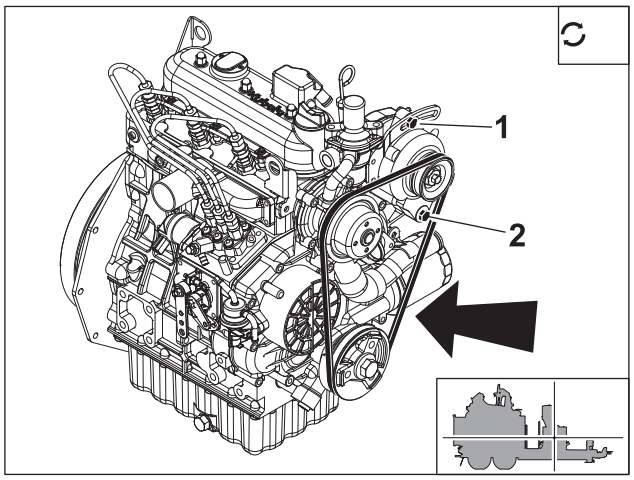

j46om025h.eps

Replace Pump Drive Belt

Replace pump drive belt (shown) every 450 hours.

To replace

1. Loosen bolts (1, 2) and remove belt.
2. Install new belt and adjust properly. See page 97.

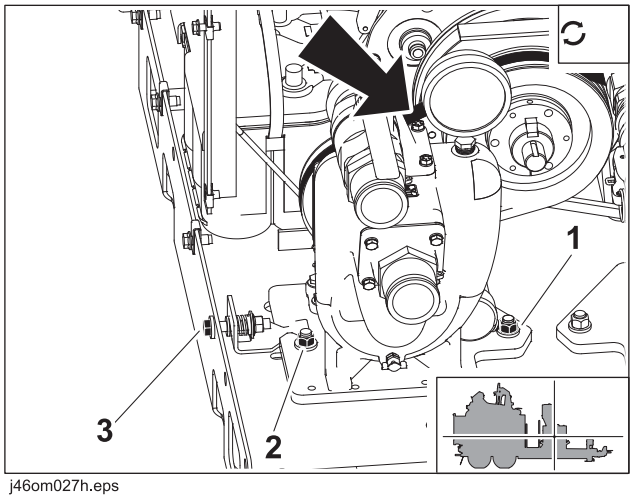

j46om027h.eps

Change Water Pump Oil

Change oil every 450 hours. Change oil more frequently if working in dusty conditions.

1. Drain at plug (3) while oil is warm.
2. Add approximately 1 qt (.95 L) NDO at fill (1) until oil is at halfway mark on sight glass (2).

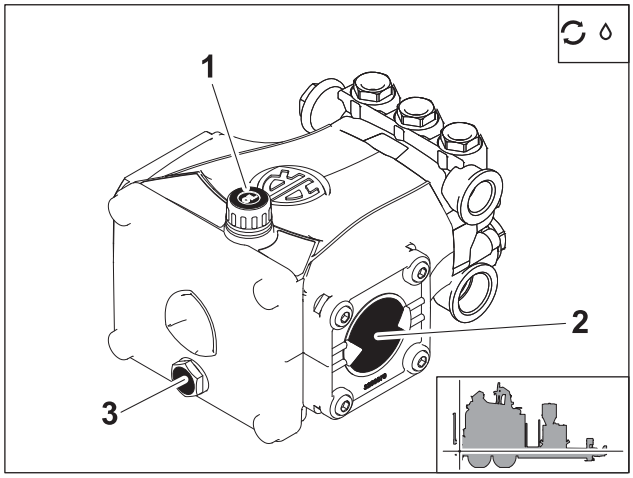

j46om003h.eps

Change Shaker Gearbox Oil

Change shaker gearbox oil every 450 hours.

To change:

1. Remove drain plug (2).
2. Drain oil and replace plug.
3. Add MPL at fill (1) until cold oil is halfway up sight glass (3).

NOTICE:

- Fill capacity is 2.4 pt (1L). Do not overfill.
- Do not drain oil from gearbox when hot. Let gearbox cool before removing drain plug.

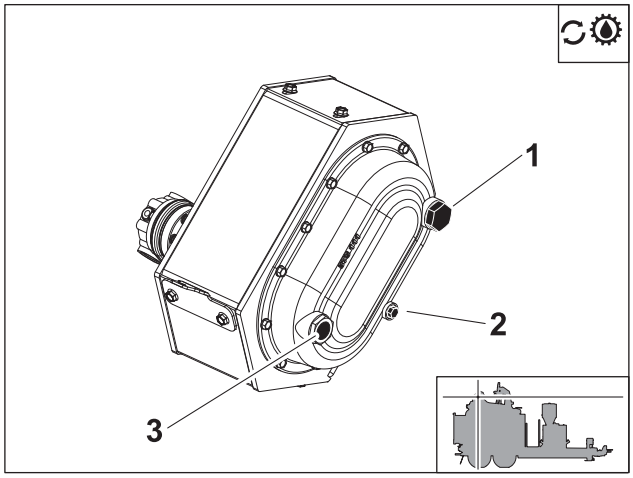

j46om040h.eps

900 Hour

Recycling Unit

Change Hydraulic Fluid and Filter

Change hydraulic fluid and filter yearly or every 900 hours.

1. Drain hydraulic fluid (3), add THF at hydraulic fluid fill (1) until level is midway at sight glass (4).
2. Replace filter (2).

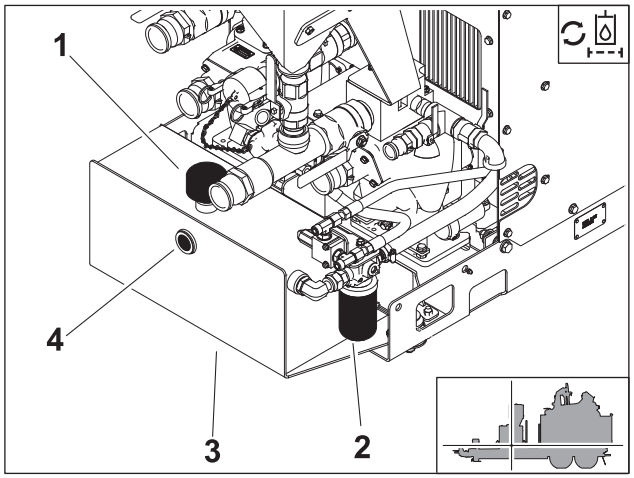

j46om047h.eps

1800 Hour

Recycling Unit

Change Engine Coolant

Drain cooling system at drain (2). Add approved coolant at fill (1) every two years or 1800 hours.

NOTICE:

- The use of non-approved coolant may lead to engine damage or premature engine failure and will void engine warranty.
- See "Approved Coolant" on page 80. for list of approved coolants.

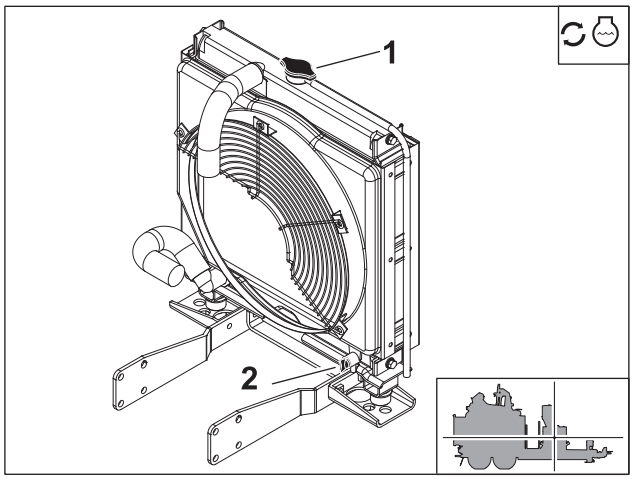

j46om026h.eps

As Needed

Location	Task	Notes
Recycling Unit	Adjust fan belt	
	Adjust pump drive belt	
	Clean hydrocyclones	
	Change remote batteries	
	Change screens	
	Check battery	

Recycling Unit

Adjust Fan Belt

Adjust fan belt as needed.

1. Turn off engine and remove key.
2. Apply moderate thumb pressure to belt between pulleys where shown.

   Belt is properly tensioned when deflection is about 1/4-3/8" (6-10 mm).
3. If needed, loosen alternator bolts (1,2) and pull alternator out until correct tension is reached.

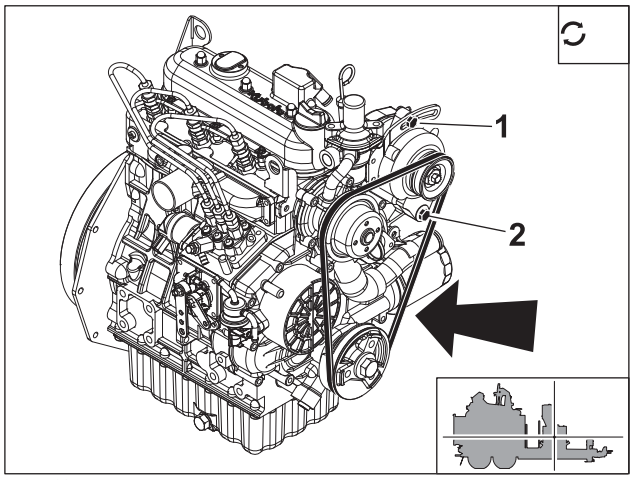

j46om025h.eps

Adjust Pump Drive Belt

Adjust pump drive belt as needed.

1. Loosen two bolts (1,2) until pump slides freely.
2. Adjust bolt (3) to increase or decrease tension.

   When washer is aligned with cutout and dimension A (shown) is 3/4" (19 mm), tension is correct.
3. Once tension is set, tighten bolts.

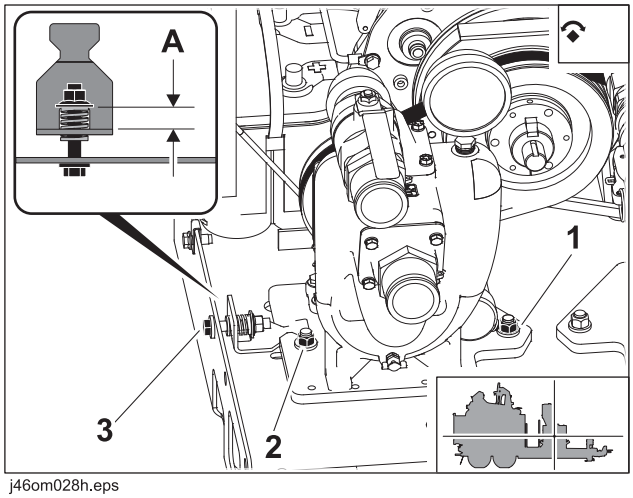

j46om028h.eps

Clean Hydrocyclones

Clean hydrocyclones as needed. Remove bottom of hydrocyclone and clean out dirt and debris.

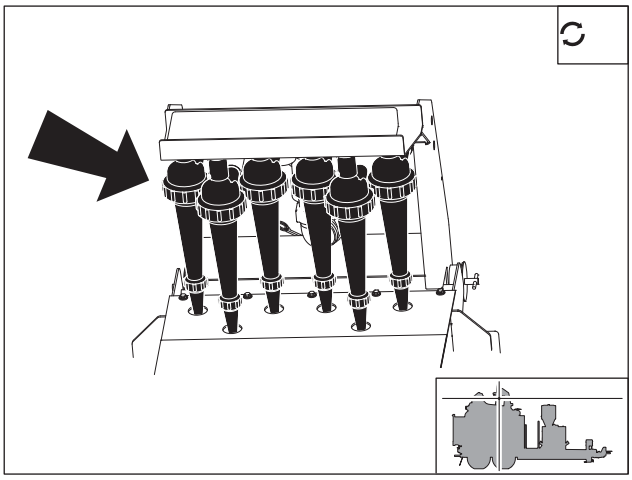

j46om041h.eps

Change Remote Batteries

IMPORTANT: Do not mix new and used batteries. Do not mix battery brands or types.

Replace remote batteries as needed, using three AA-cell alkaline batteries.

1. Remove battery cap.
2. Insert batteries as shown.
3. Replace battery cap.
4. Check operation.

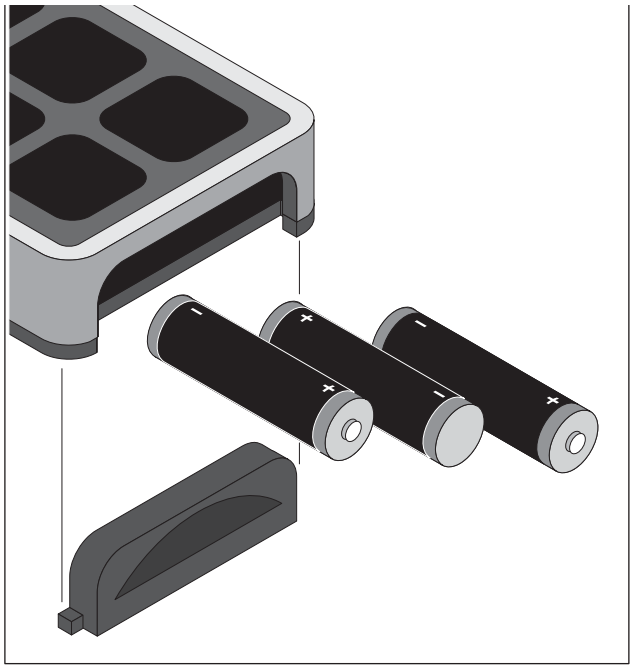

j46om030h.eps

Change Screens

Change screens as needed.

1. Pin access flaps (3) back to expose screens.
2. Remove upper screen (1) by tapping wedges with hammer.

IMPORTANT: Remove screens from the back of the unit.

3. Remove lower screen (2) by tapping wedges with hammer.
4. Replace screens and wedges.

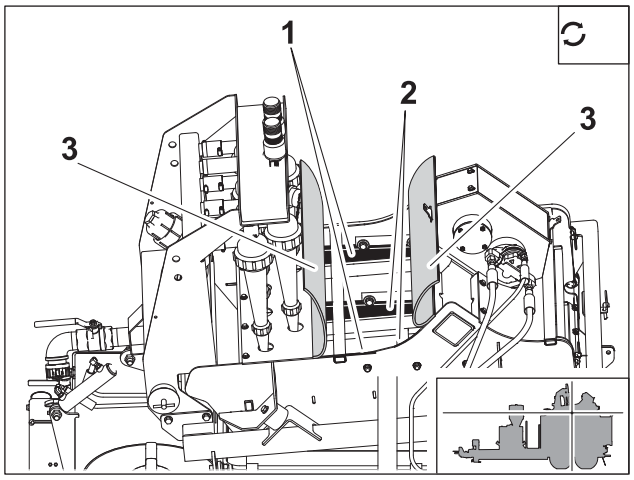

j46om033h.eps

IMPORTANT: Screens are not interchangeable.

Check Battery

Check battery as needed. Keep battery clean and terminals free of corrosion.

To clean:

1. Turn battery disconnect switch, if equipped, to the off position.
2. Ensure that no ignition sources are near batteries.
3. Loosen and remove battery cable clamps carefully, **negative (-)** cable first.
4. Clean cable clamps and terminals to remove dull glaze.
5. Check for signs of internal corrosion in cables.
6. Apply MPG to terminals after cleaning to reduce corrosion.
7. Connect battery cable clamps, **positive (+)** cable first.
8. Tighten any loose connections.
9. Ensure that battery tiedowns are secure.
10. Turn battery disconnect switch to the on position.

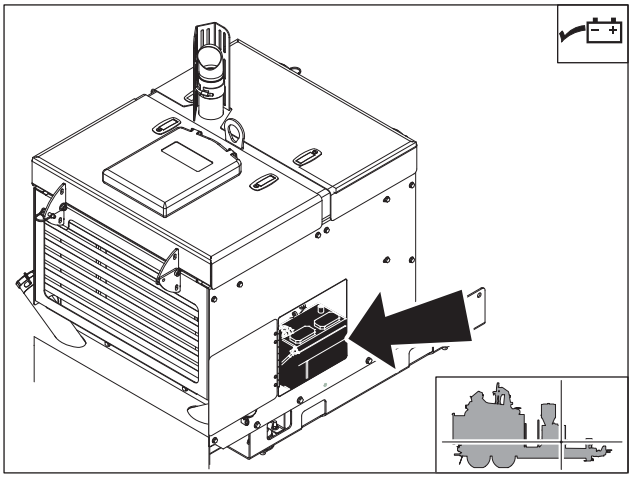
j46om022h.eps

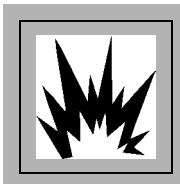

WARNING Explosion possible. Serious injury or equipment damage could occur. Follow directions carefully.

To help avoid injury: Do not create sparks and do not short across battery terminals for any reason.

Charge Battery

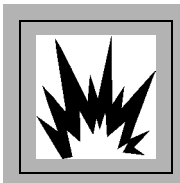

WARNING Explosion possible. Serious injury or equipment damage could occur. Follow directions carefully.

To help avoid injury:

- Use a single 12V maximum source for charging. Do not connect to rapid chargers or dual batteries.
- Use caution and wear personal protective equipment such as safety eyewear, when charging or cleaning battery.
- Keep sparks, flames, and any ignition source away from batteries at all times. Internal contents are extremely hazardous. Leaking fluid is corrosive. Battery may be explosive at higher temperatures.
- NEVER lean over battery when making connections.
- Do not allow vehicles to touch when charging.
- Do not attempt to charge a battery that is leaking, bulging, heavily corroded, frozen, or otherwise damaged.
- NEVER short-circuit battery terminals for any reason or strike battery posts or cable terminals.
- Refer to MSDS for additional information regarding this battery.

Before You Start

Electronic components can be easily damaged by electrical surges. Jump starting can damage electronics and electrical systems, and is not recommended. Try to charge the battery instead. Use quality large diameter jumper cables capable of carrying high currents (400 amps or more). Cheap cables may not allow enough current flow to charge a dead/discharged battery.

Read all steps thoroughly and review illustration before performing procedure.

Charging Procedure (Engine Off)

1. Park service vehicle close to disabled equipment but do not allow vehicles to touch. Engage parking brake in both vehicles.
2. Turn the ignition switch to the OFF position in both vehicles, and turn off all electrical loads. Disconnect the machine controller.

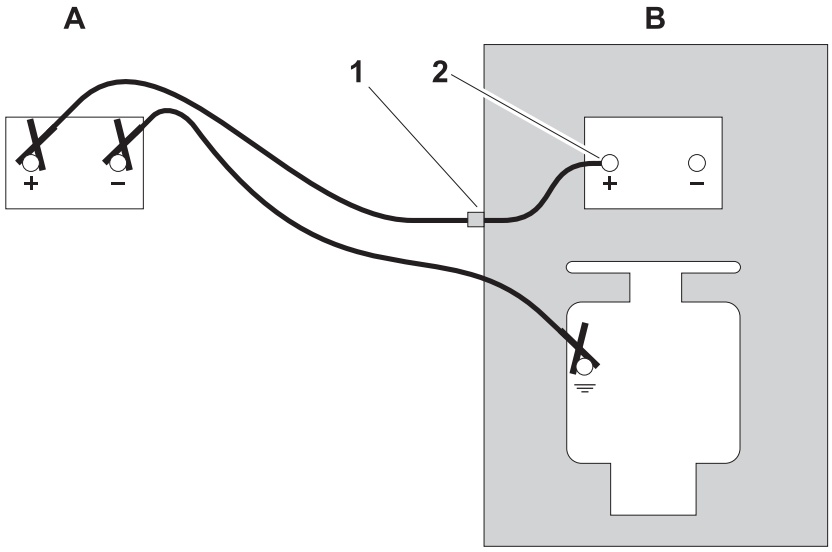

3. Inspect battery in disabled vehicle (B) for signs of cracking, bulging, leaking, or other damage. Connect red positive (+) jumper cable clamp to positive (+) post (2) of battery in disabled vehicle first.

IMPORTANT: Some equipment may have a positive jumper cable terminal (1) located externally. If so equipped, connect red positive (+) jumper cable clamp to terminal.

4. Connect the other red positive (+) jumper cable clamp to positive (+) post of battery (A) in the service vehicle.
5. Connect black negative (-) cable clamp to negative (-) post of battery (A) in service vehicle.
6. Connect the other black negative (-) cable clamp to the engine or frame ground on the disabled vehicle, at least 12" (305 mm) from the failed battery, as shown.
7. Operate service vehicle engine at 1500-2000 rpm for a few minutes to build an electrical charge in the failed battery.
8. Stop engine in service vehicle.
9. Remove jumper cables from the service vehicle, black negative (-) clamp first. Do not allow clamps to touch.
10. Remove black negative (-) cable clamp from the disabled engine or frame ground first.
11. Remove red positive (+) cable clamp from the disabled vehicle positive (+) battery post last.
12. Reconnect machine controller and try to start disabled vehicle.
13. If the disabled vehicle did not start, check for loose or corroded battery cable connections. Poor connections will prevent current from charging the failed battery. Clean terminals and posts if necessary and repeat steps above.

200 Mile

Location	Task	Notes
Trailer	Adjust electric brakes	initial

Trailer

Adjust Electric Brakes

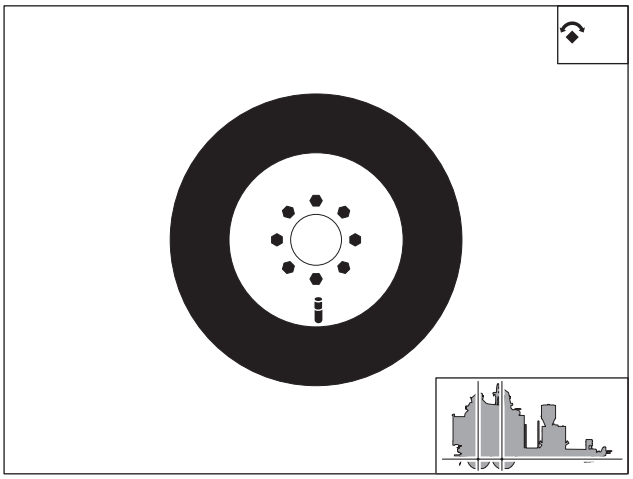
j46om049h.eps

Adjust brakes after 200 miles (300 km) initially.

1. Place adequate jack stands under frame rails and remove wheels.
2. Remove cover from adjusting slot on bottom of backing plate.
3. Rotate adjuster starwheel with screwdriver or brake spoon to expand brake shoes. Adjust until drum is very difficult to turn by hand.
4. Rotate starwheel the other direction until drum turns with slight drag.
5. Replace adjusting slot cover and replace wheel.
6. Repeat procedure for all remaining brakes.
7. Remove jack stands and lower wheels to ground.

3000 Mile

Location	Task	Notes
Trailer	Adjust electric brakes	

Trailer

Adjust Electric Brakes

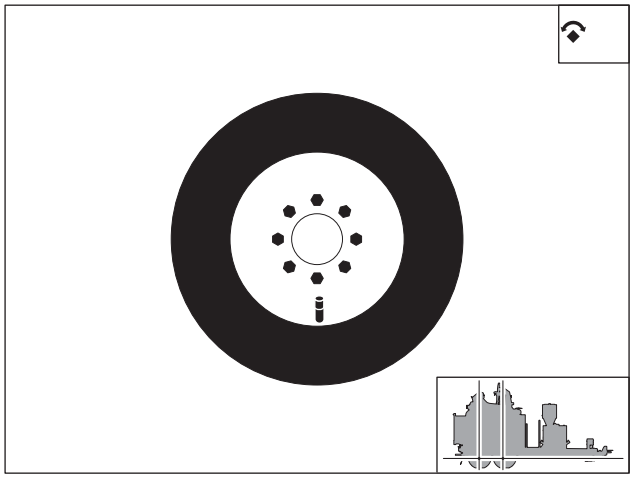
j46om049h.eps

Adjust brakes every 3000 miles (5000 km).

1. Place adequate jack stands under frame rails and remove wheels.
2. Remove cover from adjusting slot on bottom of backing plate.
3. Rotate adjuster starwheel with screwdriver or brake spoon to expand brake shoes. Adjust until drum is very difficult to turn by hand.
4. Rotate starwheel the other direction until drum turns with slight drag.
5. Replace adjusting slot cover and replace wheel.
6. Repeat procedure for all remaining brakes.
7. Remove jack stands and lower wheels to ground.

12,000 Mile

Location	Task	Notes
Trailer	Inspect brake shoes and linings	
	Inspect and lube axle bearings	

Trailer

Inspect Brake Shoes and Linings

Inspect shoes and linings every 12 months or 12,000 miles (20 000 km) for wear. When lining is worn to 1/16" (2 mm) or less, replace linings. Replace shoe and lining if contaminated by oil.

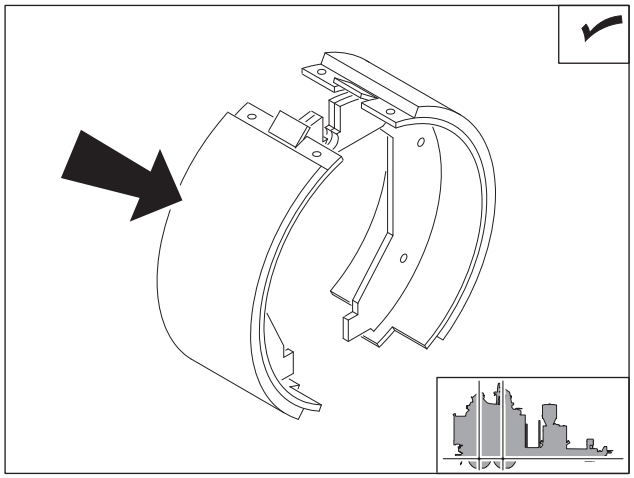

j46om050h.eps

Adjust and Lubricate Bearings

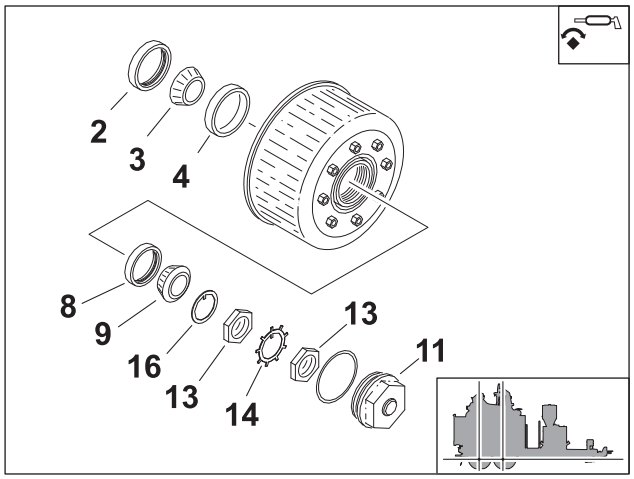

j46om051h.eps

1. Place adequate jack stands under frame rails and remove wheels.
2. Unscrew grease cap (11) while holding the hub stationary.
3. Bend locking tang (14) down from outer spindle nut (13) and remove spindle nut (3).
4. Remove tang washer, unscrew inner spindle nut and remove spindle washer (16).
5. Remove hub from spindle. Do not drop outer bearing cone.
6. Pry seal (2) from hub and remove inner bearing cone (3).
7. Inspect brake drum for excessive wear or heavy scoring.

Condition	Recommended Action
Brake drum worn more than .020" (.5 mm).	Remachine drum surface
Brake drum worn out of round more than .015" (.39 mm).	
Brake drum has scoring and other wear greater than .090" (2.29 mm)	Replace drum

8. Clean all grease from bearing cups (4,8), cones (9,3), hardware, and hub bore using suitable solvent. Dry components with lint free cloth.
9. Inspect bearing cups and cones for pitting, spalling, and corrosion. Replace if damaged.
10. Pack all cones using an extreme pressure, water resistant lithium complex grease. Apply light coating of grease to bearing cones.
11. Install the bearing and washer into the hub. Thread on the inner nut, rotate the hub, and tighten the nut until the hub will not rotate. This requires a minimum of 100 ft•lb (136 N•m) of torque.
12. Loosen the nut to remove preload torque.
13. Hand tighten the nut and back it off 1/4 to 3/4 of a turn.
14. Place tang washer on spindle and bend one tang inward over the nut. This will keep the inner nut from turning while torque is applied to the outer nut.
15. Install the outer nut and torque to 225-250 ft•lb (305-309 N•m). Ensure that inner nut does not turn. Bend two tangs from the tang washer over the outer flats to secure.
16. Install cap with o-ring and plug installed. Rotate the hub and check bearing adjustment. Allowable end play is .001-.010" (.025-.25 mm).

Specifications

Trailer Specific

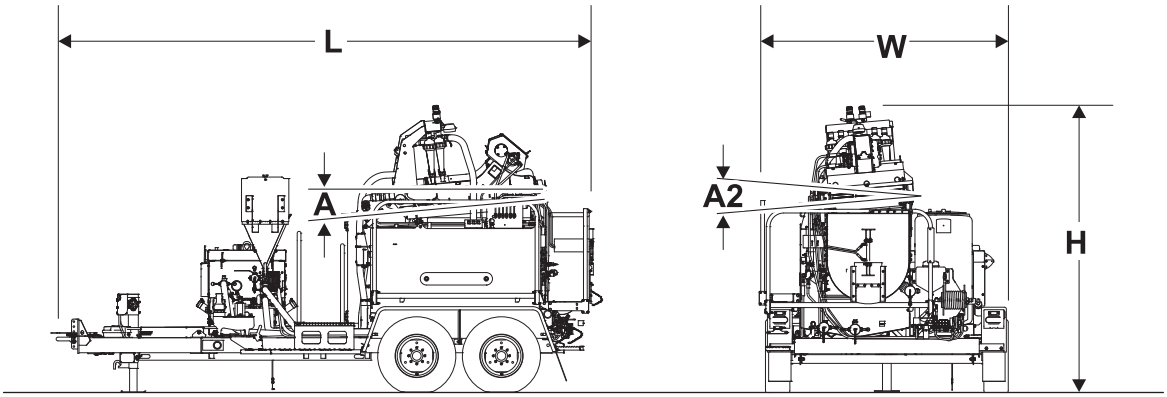

j46om001h.eps

Dimensions		U.S.	Metric
L	Length, T14R trailer	216 in	5.48 m
H	Height	109 in	2.77 m
W	Width (as shown; variable with layout flexibility)	100 in	2.54 m
A	Screen angle	8°	8°
A2	Screen level angle	+5° to -5°	+5° to -5°
Dry		6585 lb	2987 kg
Full water tank, empty MR90 tank		8985 lb	4075 kg
Empty water tank, full MR90 tank		10145 lb	4601 kg
Full water tank, full MR90 tank		13065 lb	5926 kg
Tongue weight empty		1205 lb	547 kg
Tongue weight full		1415 lb	642 kg

Skid Specific

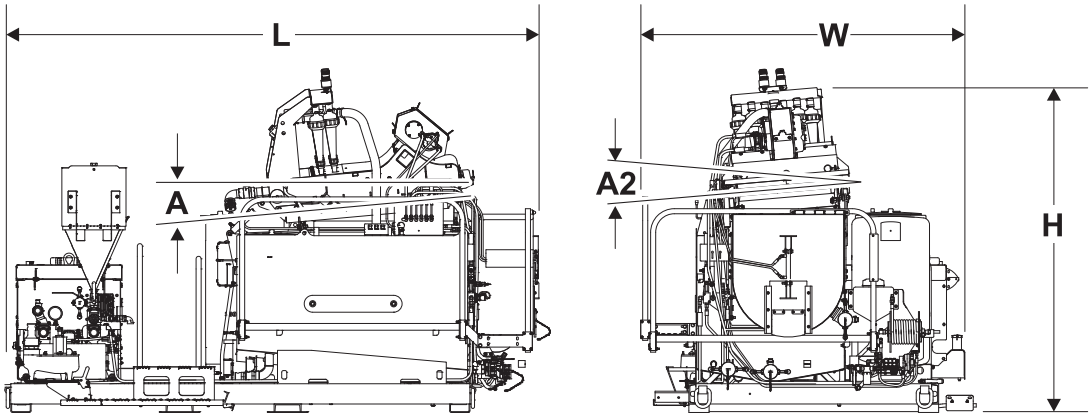

j46om053h.eps

Dimensions		U.S.	Metric
L	Length	158 in	4 m
H	Height	96 in	2.4 m
W	Width (as shown; variable with layout flexibility)	96 in	2.4 m
A	Screen angle	8°	8°
A2	Screen level angle	+5° to -5°	+5° to -5°
Weight, dry		5375 lb	2438 kg
System weight, with fluid		11855 lb	5377 kg

MR90 General

Engine		U.S.	Metric
Kubota® D1105, diesel			
	Cooling medium	water	
	Injection	indirect	
	Aspiration	natural	
	Number of cylinders	3	
	Displacement	68.5 in^3	1.12 L
	Bore	3.07 in	78.0 mm
	Stroke	3.09 in	78.4 mm
Manufacturer's gross power (per SAE J1995)		24.8 hp	18.5 kW
Estimated net power rating (per SAE J1349)		21.6 hp	16.1 kW
Rated speed		3000 rpm	3000 rpm

Performance	U.S.	Metric
Max recycle flow rate	90 gpm	341 L/min
Max supply to drill	90 gpm	341 L/min
Shaker speed	0 to 2000 vpm	0 to 2000 vpm
Screen area	1218 in^2	7.86 km^2
Lower screen micron, standard	225 microns	225 microns
Upper screen micron, standard	88 microns	88 microns

Fluid Capacities	U.S.	Metric
Engine oil with filter	4.2 qt	4 L
Fuel tank	15 gal	18.9 L
MR90 tank total	445 gal	1685 L
Hydraulic reservoir	8.0 gal	30.2 L
MR90 tank dirty side	339 gal	1283 L
MR90 tank clean side	106 gal	401 L
Water tank	300 gal	1135 L

Water Pump System	U.S.	Metric
Maximum pressure	2500 psi	207 bar
Flow	3 gpm	15.1 L/min
Hose reel capacity (locking)	50 ft	15.3 m
Antifreeze	50/50 water/antifreeze mix	

Hydraulic System	U.S.	Metric
Pressure	3000 psi	207 bar
Drive type	gear pump	
Flow rate	8.0 gpm	30.2 L/min

Noise levels
Operator 89 dBA sound pressure per ISO 6394. Exterior 112 dBA sound power per ISO 6393.

T14R Trailer		U.S.	Metric
Dimensions			
	Clearance at jack foot pad	12 in	305 mm
	Adj. coupler height	18-24 in	457-610 mm
	Width between fenders	76 in	1.9 m
	Width outside fenders	96 in	2.4 m
General			
	Number of axles	2	
	Coupler (square mount drawbar)	3 in or 2.5 in	76 mm or 64 mm
	Type of brakes	electric	
	Lug nut torque	90-120 ft•lb	122-163 N•m
	Hitch bolt torque	260 ft•lb	352 N•m
	Electrical system	12V DC	
Tire	LT215/85R16 load range E	80 psi	5.5 bar
Load rating			
	gross vehicle weight rating (GVWR)	14000 lb	5443 kg
	gross axle weight rating, each (GAWR)	7000 lb	3175 kg

Specifications are called out according to SAE recommended practices. Specifications are general and subject to change without notice. If exact measurements are required, equipment should be weighed and measured. Due to selected options, delivered equipment may not match that shown.

Load rating for speeds up to 65 mph (104 km/h).

Countries in the European Union should have received a Declaration of Conformity (DOC) with this machine similar to the example below.

The Charles Machine Works, Inc.
PO Box 66
1959 West Fir Avenue
Perry, Oklahoma, USA 73077-0066
Phone: 580 572 3784
FAX: 580 572 3525

Declares that the product:

Model: **Ditch Witch® XXXX**

Type: **(machine type)**

Engine Power: **xxx kW**

Serial Number: **CMWXXXXXXXXXXXXX**

Conforms to the requirements of:

2006/42/EC Machinery Directive

2004/108/EC Electromagnetic Compatibility Directive

2000/14/EC Noise Emission Directive

Measured sound power level (Annex V): **xxx dBA**
Guaranteed sound power level (Annex V): **xxx dBA**

The Technical Construction File is maintained at the manufacturer's location.

The manufacturer's European representative is:

Ditch Witch Barcelona
International Underground Systems, S.L.
C/EL PLA, 130 * Poligon Industrial El Pla
08980 Sant Feliu De Llobregat * Spain
Phone: +34 93 632 7344
FAX: +34 93 632 7343

Support

Procedure

Notify your dealer immediately of any malfunction or failure of Ditch Witch® equipment.

Always give model, serial number, and approximate date of your equipment purchase. This information should be recorded and placed on file by the owner at the time of purchase.

Return damaged parts to dealer for inspection and warranty consideration if in warranty time frame.

Order genuine Ditch Witch replacement or repair parts from your authorized Ditch Witch dealer. Use of another manufacturer's parts may void warranty consideration.

Resources

Publications

Contact your Ditch Witch dealer for publications and videos covering safety, operation, service, and repair of your equipment.

Ditch Witch Training

For information about on-site, individualized training, contact your Ditch Witch dealer.

Warranty

Ditch Witch® Equipment and Replacement Parts Limited Warranty Policy

Subject to the limitation and exclusions herein, free replacement parts will be provided at any authorized Ditch Witch dealership for any Ditch Witch equipment or parts manufactured by The Charles Machine Works, Inc. (CMW) that fail due to a defect in material or workmanship within one (1) year of first commercial use. Free labor will be provided at any authorized Ditch Witch dealership for installation of parts under this warranty during the first year following "initial commercial" use of the serial-numbered Ditch Witch equipment on which it is installed. The customer is responsible for transporting their equipment to an authorized Ditch Witch dealership for all warranty work.

Exclusions from Product Warranty

- All incidental or consequential damages.
- All defects, damages, or injuries caused by misuse, abuse, improper installation, alteration, neglect, or uses other than those for which products were intended.
- All defects, damages, or injuries caused by improper training, operation, or servicing of products in a manner inconsistent with manufacturer's recommendations.
- All engines and engine accessories (these are covered by original manufacturer's warranty).
- Tires, belts, and other parts which may be subject to another manufacturer's warranty (such warranty will be available to purchaser).
- ALL IMPLIED WARRANTIES NOT EXPRESSLY STATED HEREIN, INCLUDING ANY WARRANTY OF FITNESS FOR A PARTICULAR PURPOSE AND MERCHANTABILITY.

IF THE PRODUCTS ARE PURCHASED FOR COMMERCIAL PURPOSES, AS DEFINED BY THE UNIFORM COMMERCIAL CODE, THEN THERE ARE NO WARRANTIES WHICH EXTEND BEYOND THE FACE HEREOF AND THERE ARE NO IMPLIED WARRANTIES OF ANY KIND WHICH EXTEND TO A COMMERCIAL BUYER. ALL OTHER PROVISIONS OF THIS LIMITED WARRANTY APPLY INCLUDING THE DUTIES IMPOSED.

products have been tested to deliver acceptable performance in most conditions. This does not imply they will deliver acceptable performance in all conditions. Therefore, to assure suitability, products should be operated under anticipated working conditions prior to purchase.

Defects will be determined by an inspection within thirty (30) days of the date of failure of the product or part by CMW or its authorized dealer. CMW will provide the location of its inspection facilities or its nearest authorized dealer upon inquiry. CMW reserves the right to supply remanufactured replacements parts under this warranty as it deems appropriate.

Extended warranties are available upon request from your local Ditch Witch dealer or CMW.

Some states do not allow exclusion or limitation of incidental or consequential damages, so above limitation of exclusion may not apply. Further, some states do not allow exclusion of or limitation of how long an implied warranty lasts, so the above limitation may not apply. This limited warranty gives product owner specific legal rights and the product owner may also have other rights which vary from state to state.

For information regarding this limited warranty, contact CMW's Product Support department, P.O. Box 66, Perry, OK 73077-0066, or contact your local dealer.

First version: 1/91; Latest version: 11/11

A Note To
Ditch Witch
Equipment Owners:

If your equipment was purchased through a Ditch Witch dealer, there is no need to read further.

However, if you purchased from any other source, please fill out the form on the reverse side and return it to us.

This will enable you to receive updates on this equipment as well as information on new products of interest.

Thanks for using Ditch Witch equipment.

(Please Fold Along This Line And Seal At Bottom With Tape)

NO POSTAGE
NECESSARY
IF MAILED
IN THE
UNITED STATES

BUSINESS REPLY MAIL

FIRST CLASS PERMIT NO 23 PERRY OKLAHOMA

POSTAGE WILL BE PAID BY

The Charles Machine Works, Inc.
P.O. Box 66
Perry, Oklahoma 73077-9989

A Note To
Ditch Witch
Equipment Owners:

If your equipment was purchased through a Ditch Witch dealer, there is no need to read further.

However, if you purchased from any other source, please fill out the form on the reverse side and return it to us.

This will enable you to receive updates on this equipment as well as information on new products of interest.

Thanks for using Ditch Witch equipment.

(Please Fold Along This Line And Seal At Bottom With Tape)

NO POSTAGE
NECESSARY
IF MAILED
IN THE
UNITED STATES

BUSINESS REPLY MAIL

FIRST CLASS PERMIT NO 23 PERRY OKLAHOMA

POSTAGE WILL BE PAID BY

The Charles Machine Works, Inc.
P.O. Box 66
Perry, Oklahoma 73077-9989

Ditch Witch® Registration Card

Please Type or Print All Information

Purchaser's Company Name

Attention

Street Address or P.O. Box

City County

State Zip Nation

( )

Phone Number With Area Code

Model Serial Number

Attachments/Accessories Serial Numbers

Attachments/Accessories Serial Numbers

Attachments/Accessories Serial Numbers

Name of Ditch Witch Dealership

Your Signature

Ditch Witch® Registration Card

Please Type or Print All Information

Purchaser's Company Name

Attention

Street Address or P.O. Box

City County

State Zip Nation

( )

Phone Number With Area Code

Model Serial Number

Attachments/Accessories Serial Numbers

Attachments/Accessories Serial Numbers

Attachments/Accessories Serial Numbers

Name of Ditch Witch Dealership

Your Signature

Service Record

Service Performed	Date	Hours

Service Performed	Date	Hours

Appendix

Chapter Contents

Tire Safety Information

TIRE SAFETY INFORMATION

1.1. STEPS FOR DETERMINING CORRECT LOAD LIMIT – TRAILER

Determining the load limits of a trailer includes more than understanding the load limits of the tires alone. On all trailers there is a Federal certification/VIN label that is located on the forward half of the left (road) side of the unit. This certification/VIN label will indicate the trailer's Gross Vehicle Weight Rating (GVWR). This is the most the fully loaded trailer can weigh. It will also provide the Gross Axle Weight Rating (GAWR). This is the most a particular axle can weigh. If there are multiple axles, the GAWR of each axle will be provided.

If your trailer has a GVWR of 10,000 pounds or less, there is a vehicle placard located in the same location as the certification label described above. This placard provides tire and loading information. In addition, this placard will show a statement regarding maximum cargo capacity. Cargo can be added to the trailer, up to the maximum weight specified on the placard. The combined weight of the cargo is provided as a single number. In any case, remember: the total weight of a fully loaded trailer can not exceed the stated GVWR.

When loading your cargo, be sure it is distributed evenly to prevent overloading front to back and side to side. Heavy items should be placed low and as close to the axle positions as reasonable. Too many items on one side may overload a tire. The best way to know the actual weight of the trailer is to weigh it at a public scale. Talk to your dealer to discuss the weighing methods needed to capture the various weights related to the trailer. This would include the weight empty or unloaded, weights per axle, wheel, hitch or king-pin, and total weight.

Excessive loads and/or underinflation cause tire overloading and, as a result, abnormal tire flexing occurs. This situation can generate an excessive amount of heat within the tire. Excessive heat may lead to tire failure. It is the air pressure that enables a tire to support the load, so proper inflation is critical. The proper air pressure may be found on the certification/VIN label and/or on the Tire Placard. This value should never exceed the maximum cold inflation pressure stamped on the tire.

1.1.1. TRAILERS 10,000 POUNDS GVWR OR LESS

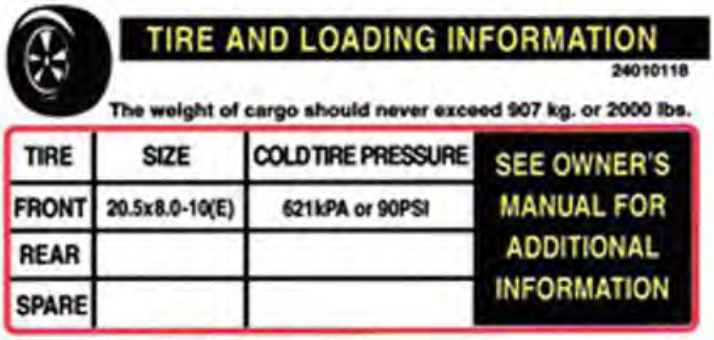

Tire and Loading Information Placard – Figure 1-1

1. Locate the statement, "The weight of cargo should never exceed XXX kg or XXX lbs.," on your trailer's placard. See figure 1-1.
2. This figure equals the available amount of cargo load capacity.
3. Determine the combined weight of cargo being loaded on the trailer. That weight may not safely exceed the available cargo load capacity.

The Tire Information Placard is attached adjacent to or near the trailer's VIN (Certification) label at the left front of the trailer.

1.1.2. TRAILERS OVER 10,000 POUNDS GVWR (NOTE: These trailers are not required to have a tire information placard on the trailer.)

1. Determine the empty weight of your trailer by weighing the trailer using a public scale or other means. This step does not have to be repeated.
2. Locate the GVWR (Gross Vehicle Weight Rating) of the trailer on your trailer's VIN (Certification) label.
3. Subtract the empty weight of your trailer from the GVWR stated on the VIN label. That weight is the maximum available cargo capacity of the trailer and must not be exceeded.

1.2. STEPS FOR DETERMINING CORRECT LOAD LIMIT – TOW VEHICLE

1. Locate the statement, "The combined weight of occupants and cargo should never exceed XXX lbs.," on your vehicle's placard.
2. Determine the combined weight of the driver and passengers who will be riding in your vehicle.
3. Subtract the combined weight of the driver and passengers from XXX kilograms or XXX pounds.
4. The resulting figure equals the available amount of cargo capacity. For example, if the "XXX" amount equals 1400 lbs. and there will be five 150 lb. passengers in your vehicle, the amount of available cargo and luggage capacity is 650 lbs. (1400-750 (5 x 150) = 650 lbs.).
5. Determine the combined weight of cargo being loaded on the vehicle. That weight must not exceed the available cargo capacity calculated in Step # 4.
6. If your vehicle will be towing a trailer, load from your trailer will be transferred to your vehicle. Consult the tow vehicle's manual to determine how this weight transfer reduces the available cargo and luggage capacity of your vehicle.

1.3. GLOSSARY OF TIRE TERMINOLOGY

Bead - the part of the tire that is made of steel wires, wrapped or reinforced by ply cords and that is shaped to fit the rim.
Bead separation - the breakdown of the bond between components in the bead.
Bias ply tire - a pneumatic tire in which the ply cords that extend to the beads are laid at alternate angles substantially less than 90 degrees to the centerline of the tread.
Carcass - the tire structure, except tread and sidewall rubber which, when inflated, bears the load.
Chunking - the breaking away of pieces of the tread or sidewall.
Cold inflation pressure - the pressure in the tire before you drive.
Cord - the strands forming the plies in the tire.
Cord separation - the parting of cords from adjacent rubber compounds.
Cracking - any parting within the tread, sidewall, or inner liner of the tire extending to cord material.
Curb weight - the weight of a vehicle with standard equipment.
Groove - the space between two adjacent tread ribs.
Gross Axle Weight Rating (GAWR) - the maximum weight that any axle can support, as published on the Certification / VIN label on the front left side of the trailer. Actual weight determined by weighing each axle on a public scale, with the trailer attached to the towing vehicle.
Gross Vehicle Weight Rating (GVWR) - the maximum weight of the fully loaded trailer, as published on the Certification / VIN label. Actual weight determined by weighing trailer on a public scale, without being attached to the towing vehicle.
Tongue Weight - the downward force exerted on the hitch ball or lunette by the trailer coupler.
Innerliner - the layer(s) forming the inside surface of a tubeless tire that contains the inflating medium within the tire.

Innerliner separation - the parting of the innerliner from cord material in the carcass.
Light truck (LT) tire - a tire designated by its manufacturer as primarily intended for use on lightweight trucks or multipurpose passenger vehicles.
Load rating - the maximum load that a tire is rated to carry for a given inflation pressure.
Maximum load rating - the load rating for a tire at the maximum permissible inflation pressure for that tire.
Maximum permissible inflation pressure - the maximum cold inflation pressure to which a tire may be inflated.
Maximum loaded vehicle weight - the sum of curb weight, accessory weight, vehicle capacity weight, and production options weight.
Outer diameter - the overall diameter of an inflated new tire.
Overall width - the linear distance between the exteriors of the sidewalls of an inflated tire, including elevations due to labeling, decorations, or protective bands or ribs.
Ply - a layer of rubber-coated parallel cords.
Ply separation - a parting of rubber compound between adjacent plies.
Pneumatic tire - a mechanical device made of rubber, chemicals, fabric and steel or other materials, that, when mounted on an automotive wheel, provides the traction and contains the gas or fluid that sustains the load.
Radial ply tire - a pneumatic tire in which the ply cords that extend to the beads are laid at substantially 90 degrees to the centerline of the tread.
Recommended inflation pressure - the inflation pressure provided by the vehicle manufacturer on the Tire Information label and on the Certification / VIN tag.
Rim - a metal support for a tire or a tire and tube assembly upon which the tire beads are seated.
Rim diameter - the nominal diameter of the bead seat.
Rim size designation - the rim diameter and width.
Rim type designation - the industry of manufacturer’s designation for a rim by style or code.
Rim width - the nominal distance between rim flanges.
Sidewall - that portion of a tire between the tread and bead.
Sidewall separation - the parting of the rubber compound from the cord material in the sidewall.
Special Trailer (ST) tire - the "ST" is an indication the tire is for trailer use only.
Tread - that portion of a tire that comes into contact with the road.
Tread rib - a tread section running circumferentially around a tire.
Tread separation - pulling away of the tread from the tire carcass.
Treadwear indicators (TWI) - the projections within the principal grooves designed to give a visual indication of the degrees of wear of the tread.
Vehicle maximum load on the tire - the load on an individual tire that is determined by distributing to each axle its share of the maximum loaded vehicle weight and dividing by two.
Vehicle normal load on the tire - the load on an individual tire that is determined by distributing to each axle its share of the curb weight and dividing by 2.

1.4. TIRE SAFETY - EVERYTHING RIDES ON IT

The National Traffic Safety Administration (NHTSA) has published a brochure (DOT HS 809 361) that discusses all aspects of Tire Safety, as required by CFR 575.6. This brochure is reproduced in part below. It can be obtained and downloaded from NHTSA, free of charge, from the following web site: http://www.nhtsa.dot.gov/cars/rules/TireSafety/ridesonit/tires_index.html

Studies of tire safety show that maintaining proper tire pressure, observing tire and trailer load limits (not carrying more weight in your trailer than your tires or trailer can safely handle), avoiding road hazards, and inspecting tires for cuts, slashes, and other irregularities are the most important things you can do to avoid tire failure, such as tread separation or blowout and flat tires. These actions, along with other care and maintenance activities, can also:

- ◊ Improve vehicle handling
- ◊ Help protect you and others from avoidable breakdowns and accidents
- ◊ Improve fuel economy
- ◊ Increase the life of your tires.

This booklet presents a comprehensive overview of tire safety, including information on the following topics:

- ◊ Basic tire maintenance
- ◊ Uniform Tire Quality Grading System
- ◊ Fundamental characteristics of tires
- ◊ Tire safety tips.

Use this information to make tire safety a regular part of your trailer maintenance routine. Recognize that the time you spend is minimal compared with the inconvenience and safety consequences of a flat tire or other tire failure.

1.5. SAFETY FIRST–BASIC TIRE MAINTENANCE

Properly maintained tires improve the steering, stopping, traction, and load-carrying capability of your trailer. Underinflated tires and overloaded vehicles are a major cause of tire failure. Therefore, as mentioned above, to avoid flat tires and other types of tire failure, you should maintain proper tire pressure, observe tire and trailer load limits, avoid road hazards, and regularly inspect your tires.

1.5.1. FINDING YOUR TRAILER'S RECOMMENDED TIRE PRESSURE AND LOAD LIMITS

Tire information placards and vehicle certification labels contain information on tires and load limits. These labels indicate the vehicle manufacturer's information including:

- ◊ Recommended tire size
- ◊ Recommended tire inflation pressure
- ◊ Vehicle capacity weight
- ◊ Front and rear gross axle weight ratings

Both placards and certification labels are permanently attached to the trailer near the left front.

1.5.2. UNDERSTANDING TIRE PRESSURE AND LOAD LIMITS

Tire inflation pressure is the level of air in the tire that provides it with load-carrying capacity and affects the overall performance of the trailer. The tire inflation pressure is a number that indicates the amount of air pressure– measured in pounds per square inch (psi) or kilopascals (kpa) –a tire requires to be properly inflated.

This number based on the trailer's design load limit, that is, the greatest amount of weight a trailer can safely carry and the tire size. The proper tire pressure for your trailer is referred to as the "recommended cold inflation pressure." (As you will read below, it is difficult to obtain the recommended tire pressure if your tires are not cold.)

Because tires are designed to be used on more than one type of vehicle, tire manufacturers list the "maximum permissible inflation pressure" on the tire sidewall. This number is the greatest amount of air pressure that should ever be put in the tire under normal driving conditions.

1.5.3. CHECKING TIRE PRESSURE

It is important to check your trailer's tire pressure at least once a month for the following reasons:

- ◊ Most tires may naturally lose air over time.
- ◊ Tires can lose air suddenly if you drive over a pothole or other object or if you strike the curb when parking.
- ◊ With radial tires, it is usually not possible to determine underinflation by visual inspection.

For convenience, purchase a tire pressure gauge to keep with your trailer. Gauges can be purchased at tire dealerships, auto supply stores, and other retail outlets.

The recommended tire inflation pressure that manufacturers provide reflects the proper psi when a tire is cold. The term cold does not relate to the outside temperature. Rather, a cold tire is one that has not been driven on for at least three hours. When you drive, your tires get warmer, causing the air pressure within them to increase. Therefore, to get an accurate tire pressure reading, you must measure tire pressure when the tires are cold or compensate for the extra pressure in warm tires.

1.5.4. STEPS FOR MAINTAINING PROPER TIRE PRESSURE

Step 1: Locate the recommended tire pressure on the trailer's tire information placard, certification label, or in the owner's manual.
Step 2: Record the tire pressure of all tires.
Step 3: If the tire pressure is too high in any of the tires, slowly release air by gently pressing on the tire valve stem with the edge of your tire gauge until you get to the correct pressure.
Step 4: If the tire pressure is too low, note the difference between the measured tire pressure and the correct tire pressure. These "missing" pounds of pressure are what you will need to add.
Step 5: Add the missing pounds of air pressure to each tire that is underinflated.
Step 6: Check all the tires to make sure they have the same air pressure (except in cases in which the front and rear tires are supposed to have different amounts of pressure).

If you have been towing your trailer and think that a tire is underinflated, fill it to the recommended cold inflation pressure indicated on your trailer's tire information placard or certification label. While your tire may still be slightly underinflated due to the extra pounds of pressure in the warm tire, it is safer to drive with air pressure that is slightly lower than the recommended cold inflation pressure than to drive with a significantly underinflated tire. Since this is a temporary fix, don't forget to recheck and adjust the tire's pressure when you can obtain a cold reading.

1.5.5. TIRE SIZE

To maintain tire safety, purchase new tires that are the same size as the trailer's original tires or another size recommended by the manufacturer. Look at the tire information placard, the owner's manual, or the sidewall of the tire you are replacing to find this information. If you have any doubt about the correct size to choose, consult with your dealer.

1.5.6. TIRE TREAD

The tire tread provides the gripping action and traction that prevent your trailer from slipping or sliding, especially when the road is wet or icy. In general, tires are not safe and should be replaced when the tread is worn down to 1/16 of an inch. Tires have built-in treadwear indicators that let you know when it is time to replace your tires. These indicators are raised sections spaced intermittently in the bottom of the tread grooves. When they appear "even" with the outside of the tread, it is time to replace your tires. Another method for checking tread depth is to place a penny in the tread with Lincoln's head upside down and facing you. If you can see the top of Lincoln's head, you are ready for new tires.

1.5.7. TIRE BALANCE AND WHEEL ALIGNMENT

To avoid vibration or shaking of the trailer when a tire rotates, the tire must be properly balanced. This balance is achieved by positioning weights on the wheel to counterbalance heavy spots on the wheel-and-tire assembly. A wheel alignment adjusts the angles of the wheels so that they are positioned correctly relative to the trailer's frame. This adjustment maximizes the life of your tires. These adjustments require special equipment and should be performed by a qualified technician.

1.5.8. TIRE REPAIR

The proper repair of a punctured tire requires a plug for the hole and a patch for the area inside the tire that surrounds the puncture hole. Punctures through the tread can be repaired if they are not too large, but punctures to the sidewall should not be repaired. Tires must be removed from the rim to be properly inspected before being plugged and patched.

1.5.9. TIRE FUNDAMENTALS

Federal law requires tire manufacturers to place standardized information on the sidewall of all tires. This information identifies and describes the fundamental characteristics of the tire and also provides a tire identification number for safety standard certification and in case of a recall.

1.5.9.1. UTQGS Information

Treadwear Number - indicates the tire's wear rate. The higher the treadwear number is, the longer it should take for the tread to wear down. For example, a tire graded 400 should last twice as long as a tire graded 200.

Traction Letter - indicates a tire's ability to stop on wet pavement. A higher graded tire should allow you to stop your car on wet roads in a shorter distance than a tire with a lower grade. Traction is graded from highest to lowest as "AA","A", "B", and "C".

Temperature Letter - indicates a tire's resistance to heat. The temperature grade is for a tire that is inflated properly and not overloaded. Excessive speed, underinflation or excessive loading, either separately or in combination, can cause heat build-up and possible tire failure. From highest to lowest, a tire's resistance to heat is graded as "A", "B", or "C".

1.5.9.2. Information on Light Truck Tires
Please refer to the diagram below.

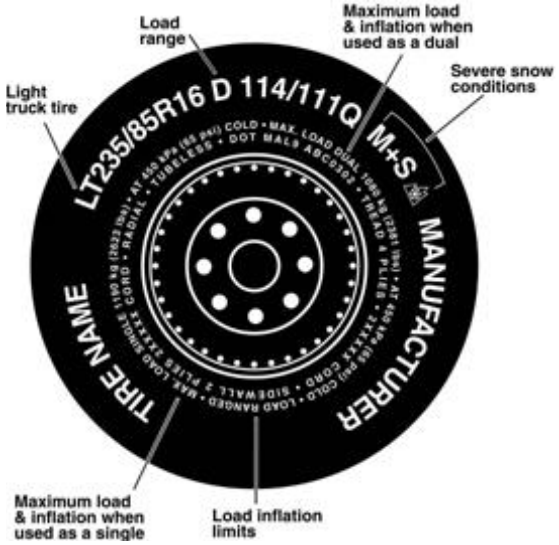

Tires for light trucks have other markings besides those found on the sidewalls of passenger tires.
LT - indicates the tire is for light trucks or trailers.
ST - indicates the tire is for trailer use only.
Max. Load Dual kg (lbs) at kPa (psi) Cold - indicates the maximum load and tire pressure when the tire is used as a dual, that is, when four tires are put on each axle.
Max. Load Single kg (lbs) at kPa (psi) Cold - indicates the maximum load and tire pressure when the tire is used as a single.
Load Range - identifies the tire's load-carrying capabilities and its inflation limits.

1.6. TIRE SAFETY TIPS

Preventing Tire Damage

- ◊ Slow down if you have to go over a pothole or other object in the road.
- ◊ Do not run over curbs or other foreign objects in the roadway, and try not to strike the curb when parking.

Tire Safety Checklist

- ◊ Check tire pressure regularly (at least once a month), including the spare (if equipped).
- ◊ Inspect tires for uneven wear patterns on the tread, cracks, foreign objects, or other signs of wear or trauma.
- ◊ Remove bits of glass and foreign objects wedged in the tread.
- ◊ Make sure your tire valves have valve caps.
- ◊ Check tire pressure before going on a long trip.
- ◊ Do not overload your trailer. Check the Tire Information and Loading Placard or Owner's Manual for the maximum recommended load for the trailer.