JT25

Tier 3 and Tier 4i

Operator's Manual

CE

CMW®

Issue 3.1
Original Instruction

053-2593

Overview

Chapter Contents

Serial Number Location 2

Intended Use 3

Equipment Modification 3

Unit Components 4

Operator Orientation. 5

About This Manual 5

- Bulleted Lists. 5
- Numbered Lists. 5

Serial Number Location

Record serial numbers and date of purchase in spaces provided. Drilling unit serial number is located as shown.

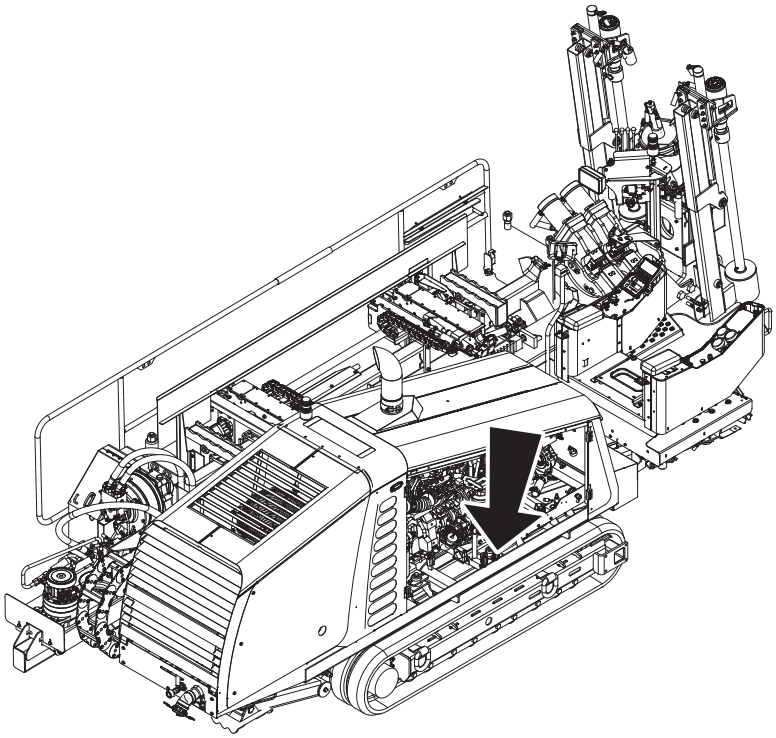

j37om001h.eps

Item	
date of manufacture	
date of purchase	
drilling unit serial number	
engine serial number	

Intended Use

The JT25 is a self-contained horizontal directional drilling unit designed to install buried cable and pipe to distances of 650' (200 m) depending on soil conditions.

The unit is designed for operation in temperatures typically experienced in earth moving and construction work environments. Provisions may be required to operate in extreme temperatures. Contact your Ditch Witch® dealer. Use in any other way is considered contrary to the intended use.

The JT25 should be used with genuine Ditch Witch drilling fluid units and Ditch Witch tracking equipment. It should be operated, serviced, and repaired only by persons familiar with its particular characteristics and acquainted with the relevant safety procedures.

Equipment Modification

This equipment was designed and built in accordance with applicable standards and regulations. Modification of equipment could mean that it will no longer meet regulations and may not function properly or in accordance with the operating instructions. Modification of equipment should only be made by competent personnel possessing knowledge of applicable standards, regulations, equipment design functionality/requirements and any required specialized testing.

Unit Components

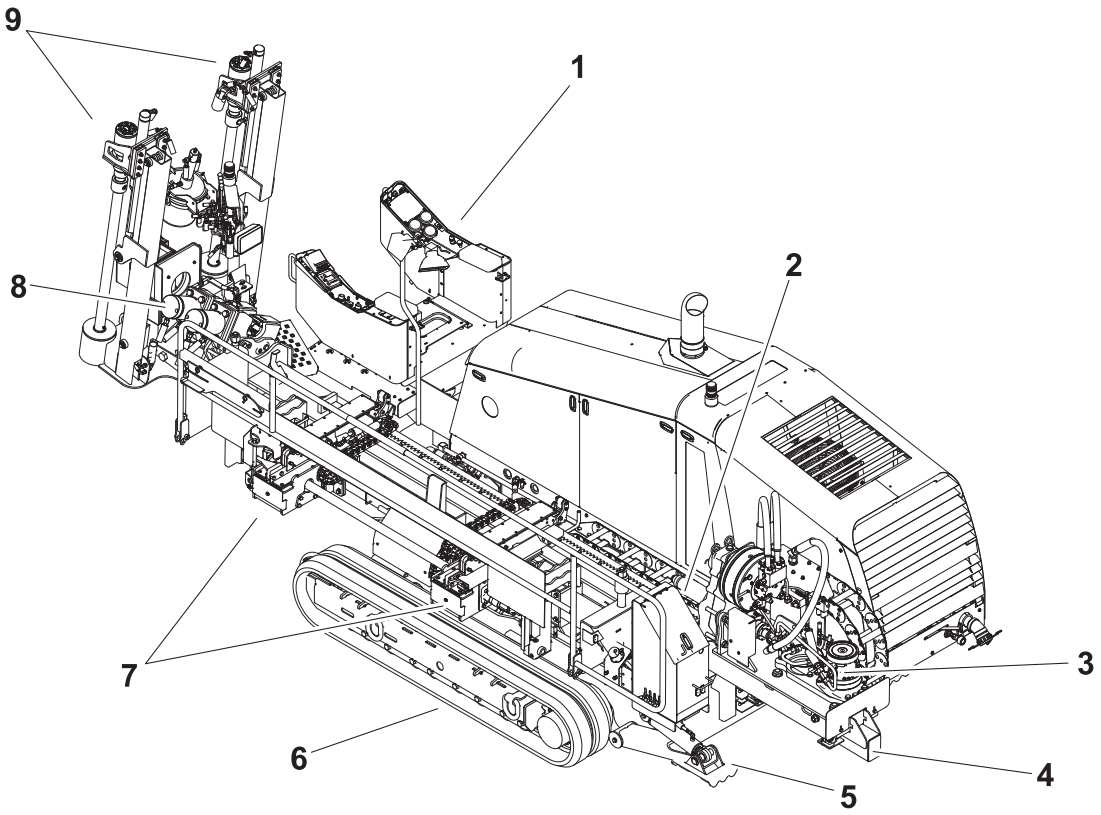

j37om002h.eps

1. Operator's station
2. Spindle
3. Carriage
4. Drill frame
5. Stabilizer
6. Tracks
7. Pipeloader
8. Vise wrenches
9. Anchoring system

Operator Orientation

IMPORTANT: Top view of unit is shown.

1. Front of unit
2. Right side of unit
3. Rear of unit
4. Left side of unit

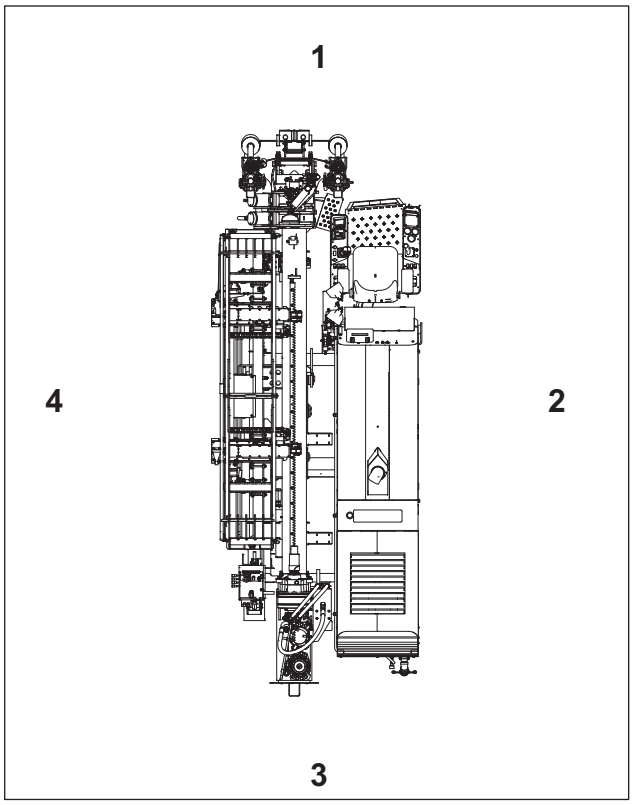

j37om003h.eps

About This Manual

This manual contains information for the proper use of this machine. See the beige **Operation Overview** pages for basic operating procedures. Cross references such as "See page 50" will direct you to detailed procedures.

Bulleted Lists

Bulleted lists provide helpful or important information or contain procedures that do not have to be performed in a specific order.

Numbered Lists

Numbered lists contain illustration callouts or list steps that must be performed in order.

Foreword

This manual is an important part of your equipment. It provides safety information and operation instructions to help you use and maintain your Ditch Witch® equipment.

Read this manual before using your equipment. Keep it with the equipment at all times for future reference. If you sell your equipment, be sure to give this manual to the new owner.

If you need a replacement copy, contact your Ditch Witch dealer. If you need assistance in locating a dealer, visit our website at **www.ditchwitch.com** or write to the following address:

The Charles Machine Works, Inc.
Attn: Marketing Department
PO Box 66
Perry, OK 73077-0066
USA

The descriptions and specifications in this manual are subject to change without notice. The Charles Machine Works, Inc. reserves the right to improve equipment. Some product improvements may have taken place after this manual was published. For the latest information on Ditch Witch equipment, see your Ditch Witch dealer.

Thank you for buying and using Ditch Witch equipment.

JT25
Tier 3 and Tier 4i
Operator's Manual

Issue number 3.1/OM-03/15
Part number 053-2593

Copyright 2014, 2015
by The Charles Machine Works, Inc.

, Ditch Witch, CMW, Jet Trac, Fluid Miser, Power Pipe, SaverLok, SaverLok System, and The Underground Authority are registered trademarks of The Charles Machine Works, Inc.

This product is covered by one or more of the following patents:
U.S. 5684466; 5794719; 5880680; 6085852; 6109371; 6179065; 6250403; 6250404; 6311790; 6411094; 6543551; 6550547; 6672409; 6739413; 6761231; 6776246; 6808210; 6827158; 6848506; 6871712; 7011166; 7038454; 7759824; 7025152; 7347283; 7413031; 7392858; 7600584; 7628226; 7987924; 8201644; 8534388; RE37,450; RE37,975; RE38,418; **AU** 689,533; 706,544; 718,034; 755,862; **CA** 2,156,398; 2,217,899; **DE** 694 17 019; 695 29 634; 697 28 716; 69829107.7-08, 19712641; 66942993.5; **EP** 0683845; **FR** 674093; **GB** 2312006; 817901; 146608; EP 927892; EP674,093; EP846,841; UK 0984132; **JP** 3,458,247; other U.S. and foreign patents pending.

Contents

Overview 1
machine serial number, information about the type of work this machine is designed to perform, basic machine components, and how to use this manual

Foreword 7
part number, revision level, and publication date of this manual, and factory contact information

Safety 11
machine safety alerts and emergency procedures

Controls 21
machine controls, gauges, and indicators and how to use them

Operation Overview 65
an overview for completing a job with this machine: planning, setting up, installing product, and restoring the jobsite; with cross references to detailed procedures

Prepare 69
procedures for inspecting and classifying the jobsite, planning the installation path, and preparing the jobsite for work

Drive 87
procedures for startup, cold start, driving, and shutdown

Transport 91
procedures for lifting, hauling, and towing

Conduct a Bore 97
procedures for drilling and backreaming

Systems and Equipment 119
downhole tools and drill pipe, anchor, electric strike, DrillLok™/tracker control, fluid systems, and diagnostic codes

Complete the Job 165
procedures for restoring the jobsite and rinsing and storing equipment

Service 171
service intervals and instructions for this machine including lubrication, replacement of wear items, and basic maintenance

Specifications **205**
machine specifications including weights, measurements, power ratings, and fluid capacities

Support **209**
the warranty policy for this machine, and procedures for obtaining warranty consideration and training

Service Record **213**
a record of major service performed on the machine

Safety

Chapter Contents

Guidelines 12

Emergency Procedures 13

- Electric Strike Description 13
- If an Electric Line is Damaged 14
- If a Gas Line is Damaged 15
- If a Fiber Optic Cable is Damaged 16
- If Machine Catches on Fire 16

Safety Alert Classifications 17

Machine Safety Alerts 18

Guidelines

Follow these guidelines before operating any jobsite equipment:

- Complete proper training and read operator's manual before using equipment.
- Contact your local One-Call (811 in USA) or the One-Call referral number (888-258-0808 in USA and Canada) to have underground utilities located before digging. Also contact any utilities that do not participate in the One-Call service. Mark proposed path with white paint prior to contacting One-Call or utilities.
- Classify jobsite based on its hazards and use correct tools and machinery, safety equipment, and work methods for jobsite.
- Mark jobsite clearly and keep spectators away.
- Wear personal protective equipment.
- Review jobsite hazards, safety and emergency procedures, and individual responsibilities with all personnel before work begins. Safety videos are available from your Ditch Witch® dealer or at ditchwitch.com/resources/safety.
- Replace missing or damaged safety shields and safety signs.
- Use equipment carefully. Stop operation and investigate anything that does not look or feel right.
- Do not operate unit where flammable gas may be present.
- Contact your Ditch Witch dealer if you have any question about operation, maintenance, or equipment use.
- Complete the equipment checklist located at www.ditchwitch.com/resources/safety.

Emergency Procedures

WARNING Jobsite hazards could cause death or serious injury. Use correct equipment and work methods. Use and maintain proper safety equipment. 274-050

Before operating any equipment, review emergency procedures and check that all safety precautions have been taken.

EMERGENCY SHUTDOWN - Turn ignition switch to stop position or push remote engine stop button (if equipped).

Electric Strike Description

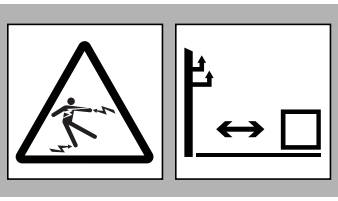

DANGER Electric shock. Contacting electric lines will cause death or serious injury. Know location of lines and stay away.

When working near electric cables, remember the following:

- Electricity follows all paths to ground, not just path of least resistance.
- Pipes, hoses, and cables will conduct electricity back to all equipment.
- Low voltage current can injure or kill. Many work-related electrocutions result from contact with less than 440 volts.

Most electric strikes are not noticeable, but indications of a strike include:

- power outage
- smoke
- explosion
- popping noises
- arcing electricity

If any of these occur, or if strike alarm sounds or flashes, assume an electric strike has occurred.

If an Electric Line is Damaged

If you suspect an electric line has been damaged and you are **on drilling unit or bonded equipment**, DO NOT MOVE. Remain on drilling machine and take the following actions. The order and degree of action will depend on the situation.

- Warn people nearby that an electric strike has occurred.
- Have someone contact electric company.
- Reverse drilling direction and try to break contact. Do not touch drill pipe with hands or hand-held tools.
- Press electric strike system self test button.
    - If alarm sounds again, stay where you are and wait for electric company to shut off power.
    - If alarm does not sound and there is no other indication of a strike, wait at least one full minute before moving away from equipment. Utility might use automatic reclosers which will restart current flow. If alarm sounds again while waiting, stay where you are until electric company shuts off power.
    - If alarm does not sound but all lights in strike indicator are on, assume strike is continuing and stay where you are until electric company shuts off power.
- Do not resume drilling or allow anyone into area until given permission by electric company.

If you suspect an electric line has been damaged and you are **off drilling unit or bonded equipment**, DO NOT TOUCH ANY EQUIPMENT connected to drilling unit. Take the following actions. The order and degree of action will depend on the situation.

- Stay where you are unless you are wearing electric insulating boots. If you leave, do not return to area or allow anyone into area until given permission by electric company.

If a Gas Line is Damaged

WARNING Fire or explosion possible. Fumes could ignite and cause burns. No smoking, no flame, no spark. 275-419 (2P)

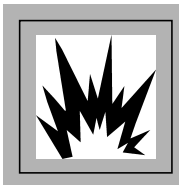

WARNING Explosion possible. Serious injury or equipment damage could occur. Follow directions carefully.

If you suspect a gas line has been damaged, take the following actions. The order and degree of action will depend on the situation.

- Immediately shut off engine(s), if this can be done safely and quickly.
- Remove any ignition source(s), if this can be done safely and quickly.
- Warn others that a gas line has been cut and that they should leave the area.
- Leave jobsite as quickly as possible.
- Immediately call your local emergency phone number and utility company.
- If jobsite is along street, stop traffic from driving near jobsite.
- Do not return to jobsite until given permission by emergency personnel and utility company.

If a Fiber Optic Cable is Damaged

Do not look into cut ends of fiber optic or unidentified cable. Vision damage can occur. Contact utility company.

If Machine Catches on Fire

Perform emergency shutdown procedure and then take the following actions. The order and degree of action will depend on the situation.

- Immediately move battery disconnect switch (if equipped and accessible) to disconnect position.
- If fire is small and fire extinguisher is available, attempt to extinguish fire.
- If fire cannot be extinguished, leave area as quickly as possible and contact emergency personnel.

Safety Alert Classifications

These classifications and the icons defined on the following pages work together to alert you to situations which could be harmful to you, jobsite bystanders or your equipment. When you see these words and icons in the book or on the machine, carefully read and follow all instructions. YOUR SAFETY IS AT STAKE.

Watch for the three safety alert levels: **DANGER**, **WARNING** and **CAUTION**. Learn what each level means.

DANGER indicates a hazardous situation that, if not avoided, will result in death or serious injury. This signal word is to be limited to the most extreme situations.

WARNING indicates a hazardous situation that, if not avoided, could result in death or serious injury.

CAUTION indicates a hazardous situation that, if not avoided, could result in minor or moderate injury.

Watch for two other words: ***NOTICE*** and **IMPORTANT**.

NOTICE indicates information considered important, but not hazard-related (e.g., messages relating to property damage).

IMPORTANT can help you do a better job or make your job easier in some way.

Machine Safety Alerts

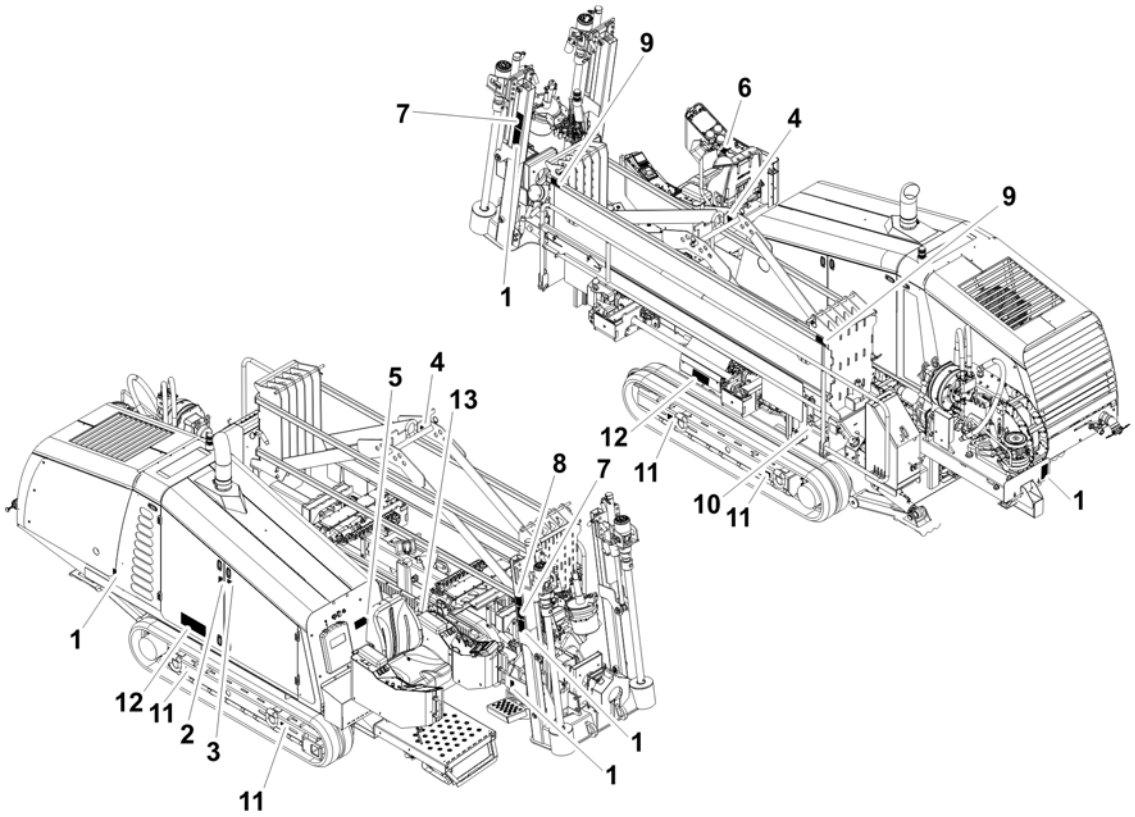

Decal_JT25_3D.png

1	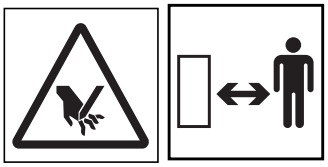	**WARNING** Moving parts could cut off hand or foot. Stay away. 275-184
2	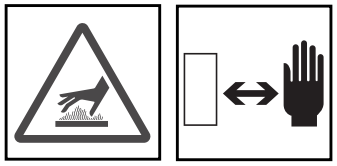	**CAUTION** Hot parts may cause burns. Do not touch until cool or wear gloves. 275-355 (2-P), 273-423 (2-P)
3	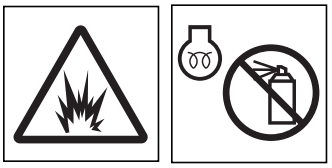	**WARNING** Fire or explosion possible. Do not use starter fluid. 273-459 (2P), 274-206 (2P), 700-206 (2P)
4		Lift point. See Transport chapter for more information. 274-442

5		**WARNING** Read operator's manual. Know how to use all controls. Your safety is at stake. 273-475
6		**WARNING** Jobsite hazards could cause death or serious injury. Use correct equipment and work methods. Use and maintain proper safety equipment. 274-050; 274-724 (2P)
7	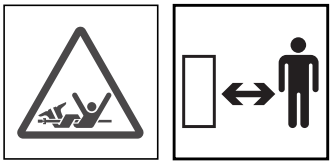	**DANGER** Turning shaft will kill you or crush arm or leg. Stay away.
8		**DANGER** Moving tools will kill or injure. Never use pipe wrenches on drill string. 273-278
9	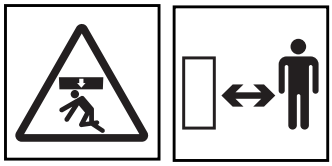	**WARNING** Crushing weight could cause death or serious injury. Use proper procedures and equipment or stay away.
10		**WARNING** Crushing weight. Place cylinder lock on extended cylinder and secure. 273-231, 273-413
11		Tiedown location. See Transport chapter for more information. 274-318
12	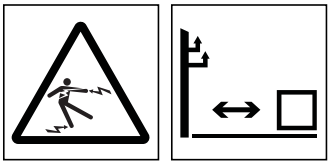	**DANGER** Electric shock will cause death or serious injury. Stay away. 274-049

13		**WARNING** Do not remove guard. Ejected pipe could result in serious injury or death.

Controls

Chapter Contents

Set-Up Console 22

Tethered Ground Drive Controller 25

Left Control Console 27

- Engine Display 27
- Traditional Controls 30
- Alternate Controls 34

Right Control Console 34

- Lights. 38
- Traditional Controls 42
- Alternate Controls 45

Anchoring System Console 45

Seat 51

Cab Controls (optional) 52

- Top/Rear 52
- Front 54

Engine Compartment Controls 56

Miscellaneous Controls 58

ESID 60

Set-Up Console

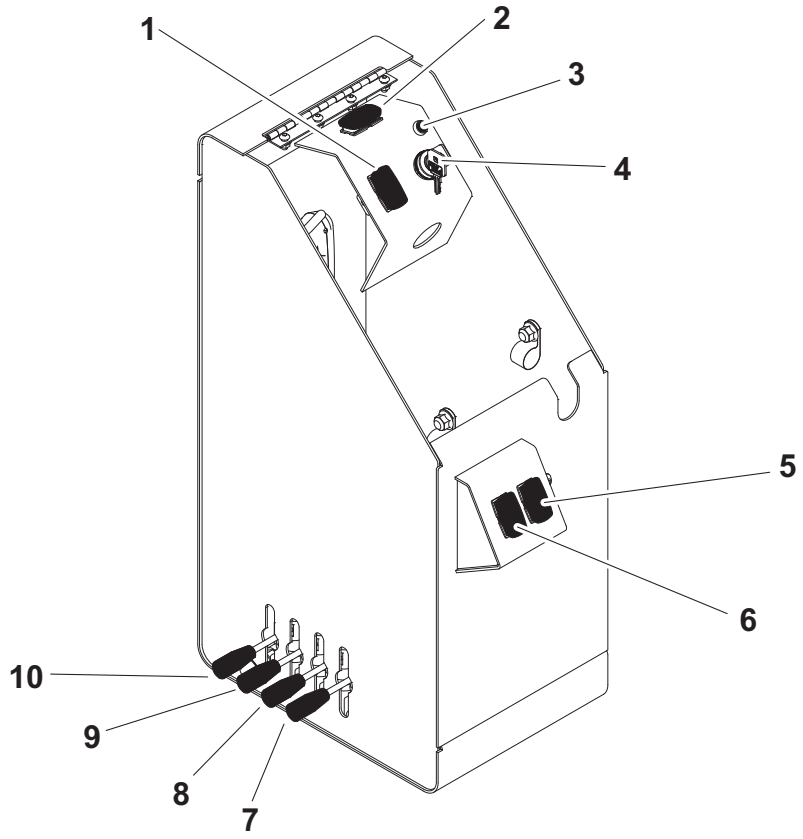

j37om004h.eps

1. Engine shutdown override switch
2. Rear hood switch
3. Cold start wait indicator
4. Ignition switch
5. Right track switch
6. Left track switch
7. Right stabilizer control
8. Left stabilizer control
9. Back frame tilt control
10. Front frame tilt control

Item	Description	Notes
1. Engine shutdown override switch 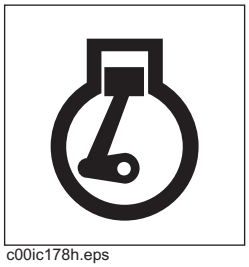 c00ic178h.eps	If engine shutdown indicator comes on, press to delay engine shutdown for 30 seconds.	This control allows a temporary override of engine shutdown. ***NOTICE:*** After 30 seconds, engine will again shut down unless fault condition has been cleared on diagnostic gauge. **IMPORTANT:** See "Electronic Controlled Engine Overview" on page 152 for more information on Tier 3 engines.

Item	Description	Notes
2. Rear hood switch 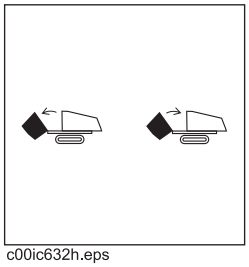 c00ic632h.eps	To open rear hood, press left side of switch. To close rear hood, press right side of switch.	
3. Cold start wait indicator 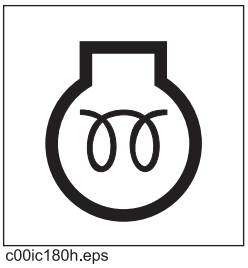 c00ic180h.eps	Lights when intake air pre-heater is operating. Wait until light goes off before starting engine.	***NOTICE:*** If indicator is on, wait until it goes out before starting engine. **IMPORTANT:** If ignition switch is turned to start position before indicator goes out, the system will be disabled and must be reset. To reset, turn ignition switch to STOP, then to run.
4. Ignition switch 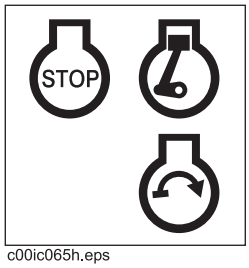 c00ic065h.eps	To start engine, insert key and turn clockwise. To stop engine, turn key counterclockwise.	**IMPORTANT:** • Restart engine with ignition switch after it has been turned off with tethered control remote engine stop switch. • If wrenches are engaged when engine is stopped with ignition switch, wrenches will release and then engage when unit is started.
5. Right track switch 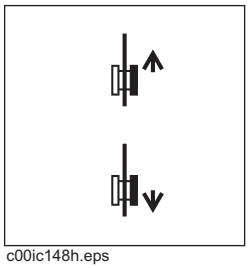 c00ic148h.eps	To move forward, press top. To move backward, press bottom.	**IMPORTANT:** Use track switches only if tethered control is inoperable.

Item	Description	Notes
6. Left track switch 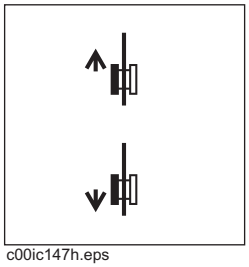 c00ic147h.eps	To move forward, press top. To move backward, press bottom.	**IMPORTANT:** Use track switches only if tethered control is inoperable.
7. Right stabilizer control 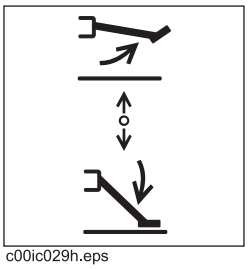 c00ic029h.eps	To raise, pull up. To lower, push down.	**IMPORTANT:** Lower left and right stabilizers to the ground together, then adjust individually. **WARNING:** Crushing weight could cause death or serious injury. Use proper procedures and equipment or stay away.
8. Left stabilizer control 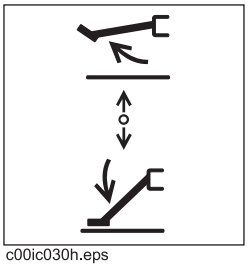 c00ic030h.eps	To raise, pull up. To lower, push down.	**IMPORTANT:** Lower left and right stabilizers to the ground to stabilize unit and then adjust for side-to-side stability. **WARNING:** Crushing weight could cause death or serious injury. Use proper procedures and equipment or stay away.
9. Back frame tilt control 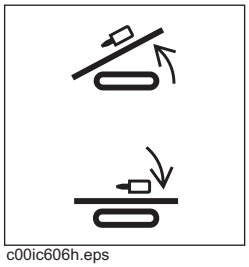 c00ic606h.eps	To raise, pull up. To lower, push down.	**IMPORTANT:** To ensure a stable platform for drilling, use front and back tilt controls together to set frame at desired pitch without raising tracks off the ground.
10. Front frame tilt control 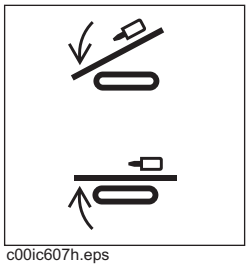 c00ic607h.eps	To raise, pull up. To lower, push down.	**IMPORTANT:** To ensure a stable platform for drilling, use front and back tilt controls together to set frame at desired pitch without raising tracks off the ground.

Tethered Ground Drive Controller

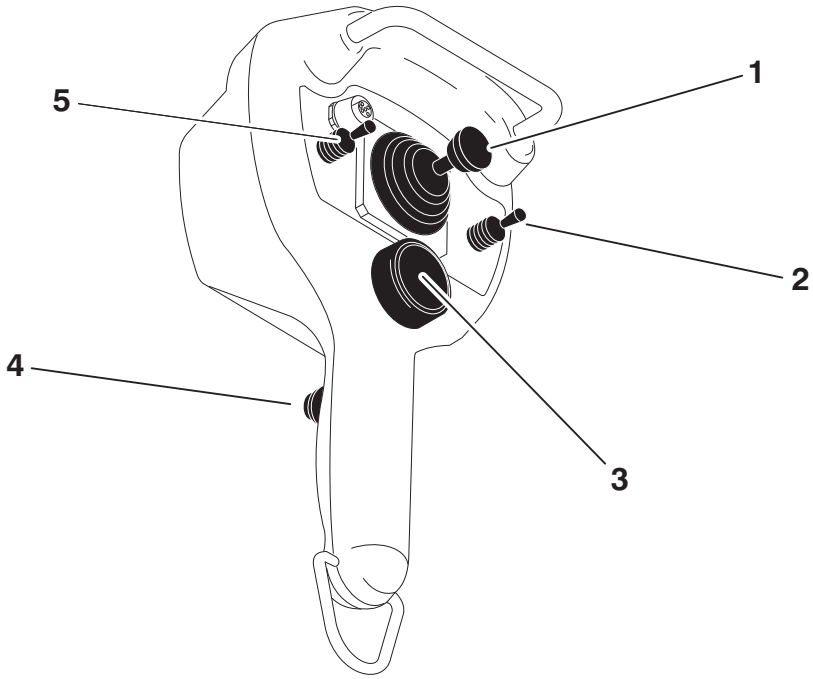

j10om016h.eps

1. Speed/direction control
2. Drive mode switch
3. Remote engine stop
4. Operator presence switch
5. Throttle switch

Item	Description	Notes
1. Speed/direction control 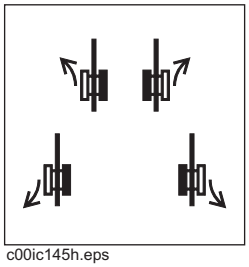 c00ic145h.eps	To move forward, push. To move backward, pull. To steer, move left or right while moving forward or backward.	**IMPORTANT:** • Operator presence switch must be pressed and operator seat must be empty for control to work. • See "Steer Unit" on page 88 for more information.

Item	Description	Notes
2. Drive mode switch 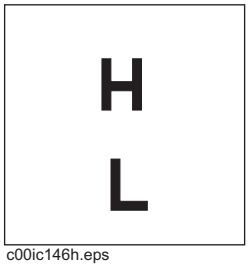 c00ic146h.eps	To select normal driving mode (high), push. To select loading and unloading mode (low), pull. To disable controller, return to center.	
3. Remote engine stop	To stop engine, press red button.	**IMPORTANT:** To restart engine, turn ignition switch off and then back on.
4. Operator presence switch	To operate ground drive with tethered controller, press. To disable controller, release.	
5. Throttle switch 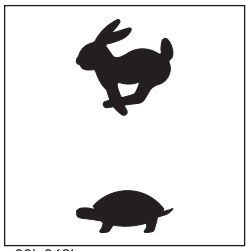 c00ic042h.eps	To increase engine speed, press top. To decrease engine speed, bottom.	

Left Control Console

Engine Display

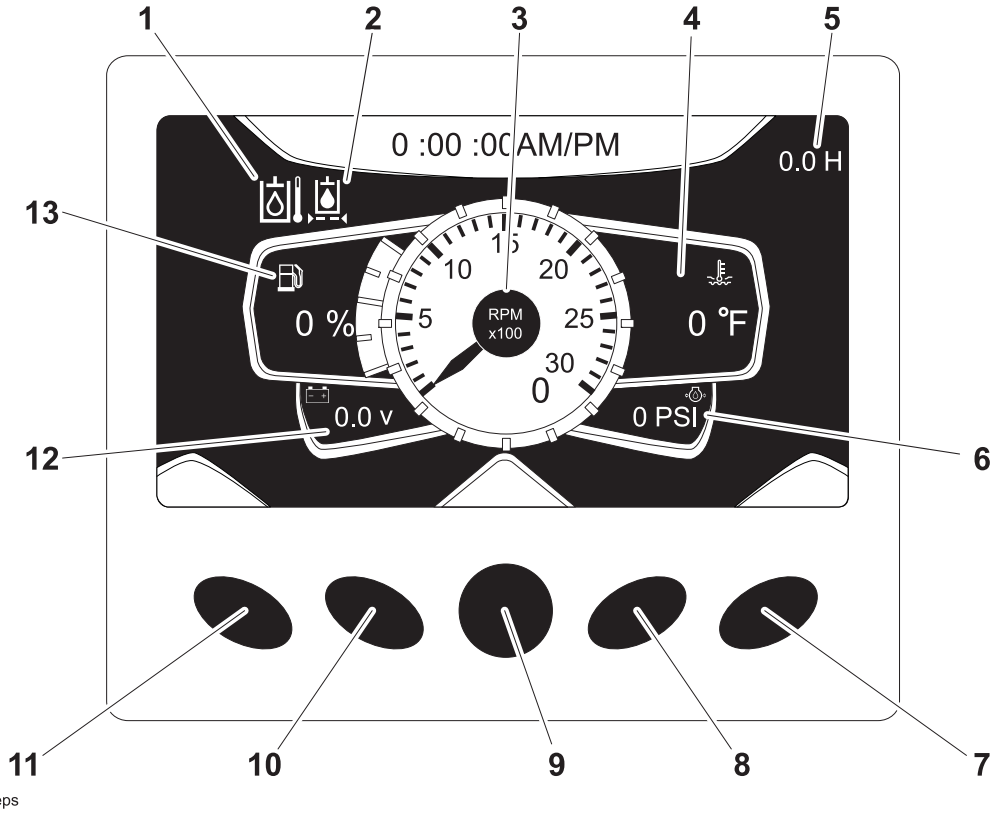

j37om065h.eps

1. Hydraulic fluid temperature
2. Hydraulic fluid filter indicator
3. Tachometer
4. Engine coolant temperature gauge
5. Hour meter
6. Engine oil pressure gauge
7. Soft key
8. Soft key
9. Main menu key
10. Soft key
11. Day/Night mode key
12. Voltmeter display
13. Fuel gauge

Item	Description	Notes
1. Hydraulic fluid temperature	Lights when hydraulic fluid temperature is too high.	
2. Hydraulic fluid filter indicator	Lights when hydraulic filter is restricted.	
3. Tachometer	Displays engine speed.	

Item	Description	Notes
4. Engine coolant temperature gauge	Displays engine coolant temperature.	Normal coolant temperature is 160°-212° F (71°-100° C).
5. Hour meter	Displays number of hours engine has been running.	
6. Engine oil pressure gauge	Displays engine oil pressure.	Full load reading should be 60-80 psi (4.1-5.5 bar).
7. Soft key	Press to select a soft key command.	Soft key commands change with each menu screen and are displayed next to the key.
8. Soft key		
9. Main menu key	Press from main screen (gauges) to select main menu.	
10. Soft key	Press to select a soft key command.	Soft key commands change with each menu screen and are displayed next to the key.
11. Day/Night mode key	Press from main screen (gauges) to toggle between day and night modes.	
12. Voltmeter display	Shows system voltage.	Normal voltage is 13-14V with engine running.
13. Fuel gauge	Displays amount of fuel remaining in tank.	See "Approved Fuel" on page 177.

Most engine display functions are self-explanatory. For more information about functions, see the manufacturer's instructions at www.fwmurphy.com.

Main Menu

IMPORTANT: Soft key commands change with each menu screen and are displayed next to the key.

Item	Description	Notes
11. System settings key	Press to select system settings menu.	System settings menu displays information about the system. Diagnostic information is only available to dealer technicians.
10. User settings key	Press to select user settings menu.	User settings menu allows user to change the language and unit settings, and to set the time and date.
9. Main screen key	Press to return to main screen (gauges).	
8. Engine diagnostics key	Press to select engine diagnostics menu.	For dealer technician use only.

Traditional Controls

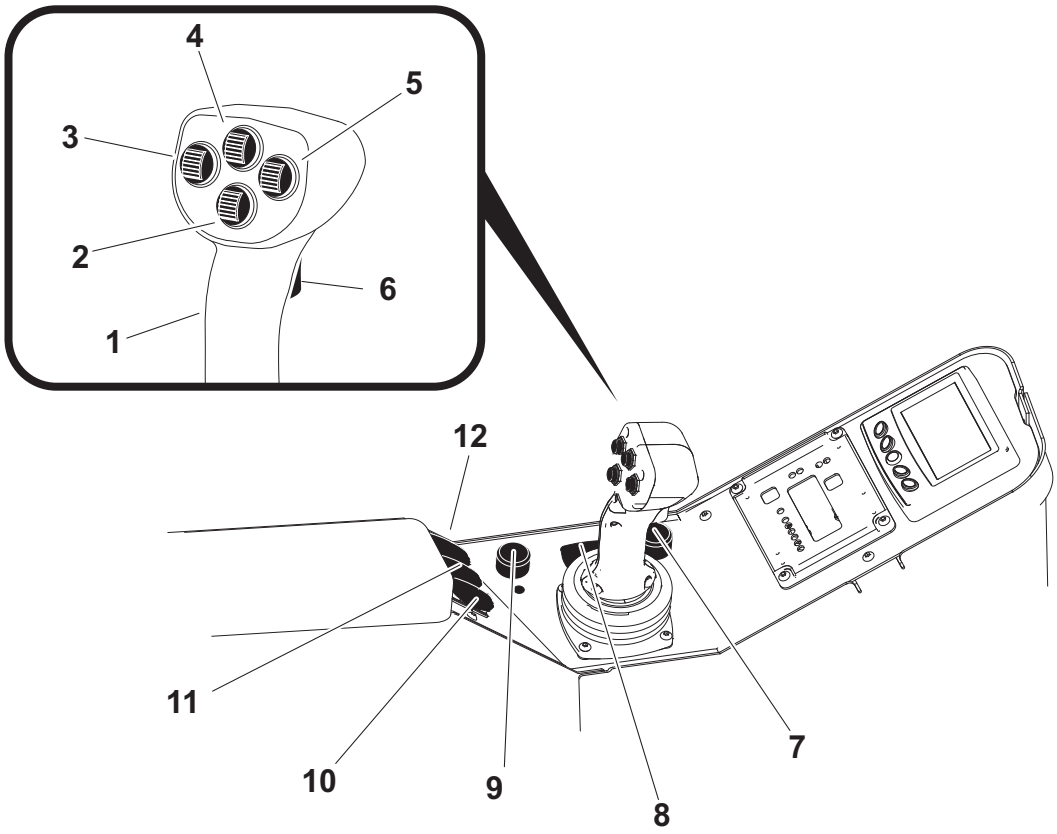

j37om007h.eps

1. Wrench control
2. Set/Resume switch
3. Pipe gripper switch
4. Pipe shuttle switch
5. Pipe lift switch
6. Pipe lubricator switch
7. Carve potentiometer
8. Carve switch
9. Fluid flow control
10. Engine throttle switch
11. High/Low rotation switch
12. Shuttle stop switch

Item	Description	Notes
1. Wrench control 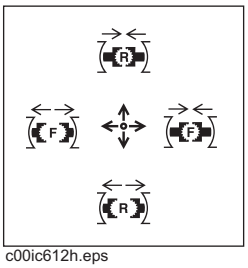 c00ic612h.eps	To clamp and rotate rear wrench, push forward. To unclamp rear wrench, pull back. To clamp front wrench, move to right. To unclamp rear wrench, move to left.	
2. Set/Resume switch 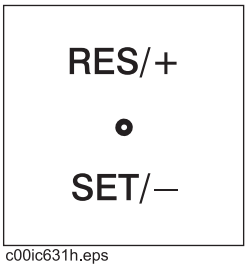 c00ic631h.eps	To resume operation or increase operation levels, press top. To set operating conditions or reduce operation levels, press bottom.	See "Cruise Control" on page 150.
3. Pipe gripper switch 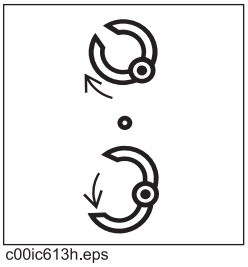 c00ic613h.eps	To close, press top. To open, press bottom.	
4. Pipe shuttle switch 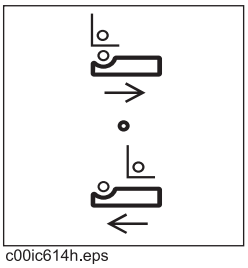 c00ic614h.eps	To move toward pipe box, press top. To move toward spindle, press bottom.	

Item	Description	Notes
5. Pipe lift switch 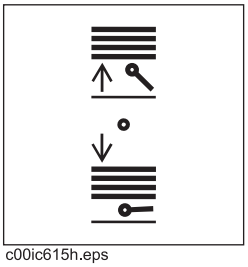 c00ic615h.eps	To raise, press top. To lower, press bottom.	
6. Pipe lubricator switch 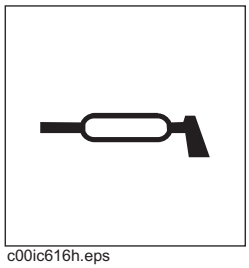 c00ic616h.eps	To apply joint compound, press.	
7. Carve window control 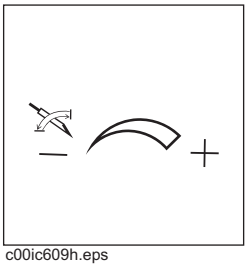 c00ic609h.eps	To increase carve window range, turn clockwise. To decrease carve window range, turn counterclockwise.	See "Use AutoCarve" on page 110.
8. AutoCarve switch 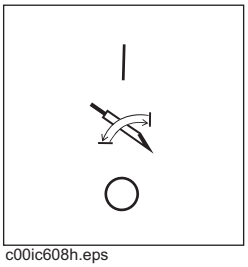 c00ic608h.eps	To enable autocarve, press top. To deactivate autocarve, press bottom.	Two-speed thrust is not allowed in autocarve mode.
9. Fluid flow control 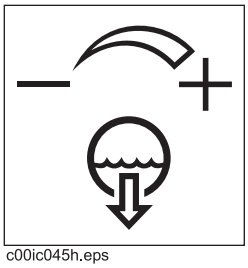 c00ic045h.eps	To increase flow, turn clockwise. To decrease flow, turn counterclockwise.	

Item	Description	Notes
10. Engine throttle switch 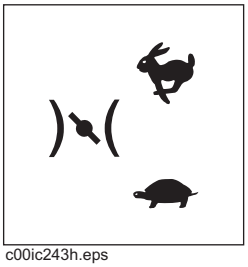 c00ic243h.eps	To increase speed, press top. To enable autothrottle mode, leave switch in top position. To disable autothrottle mode, return switch to center after desired speed is reached. To decrease speed, press bottom.	Autothrottle mode slows the engine to low throttle after 15 seconds of inactivity involving thrust, rotation, drilling fluid flow, or pipeloader functions. To return to high speed, activate thrust, rotation, drilling fluid, or an add/remove pipe cycle.
11. Two-speed rotation switch 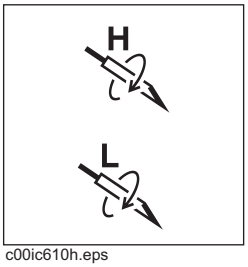
 c00ic610h.eps	To rotate in high speed, press top. To rotate in low speed, press bottom.	
12. Shuttle stop switch 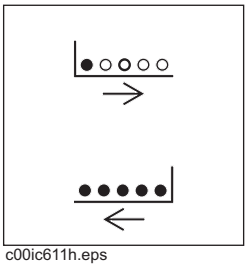 c00ic611h.eps	To lower shuttle stop, push up. To raise shuttle stop, pull down.	**IMPORTANT:** Look at pipe row indicator on drill frame to see which row shuttles will stop under.

Alternate Controls

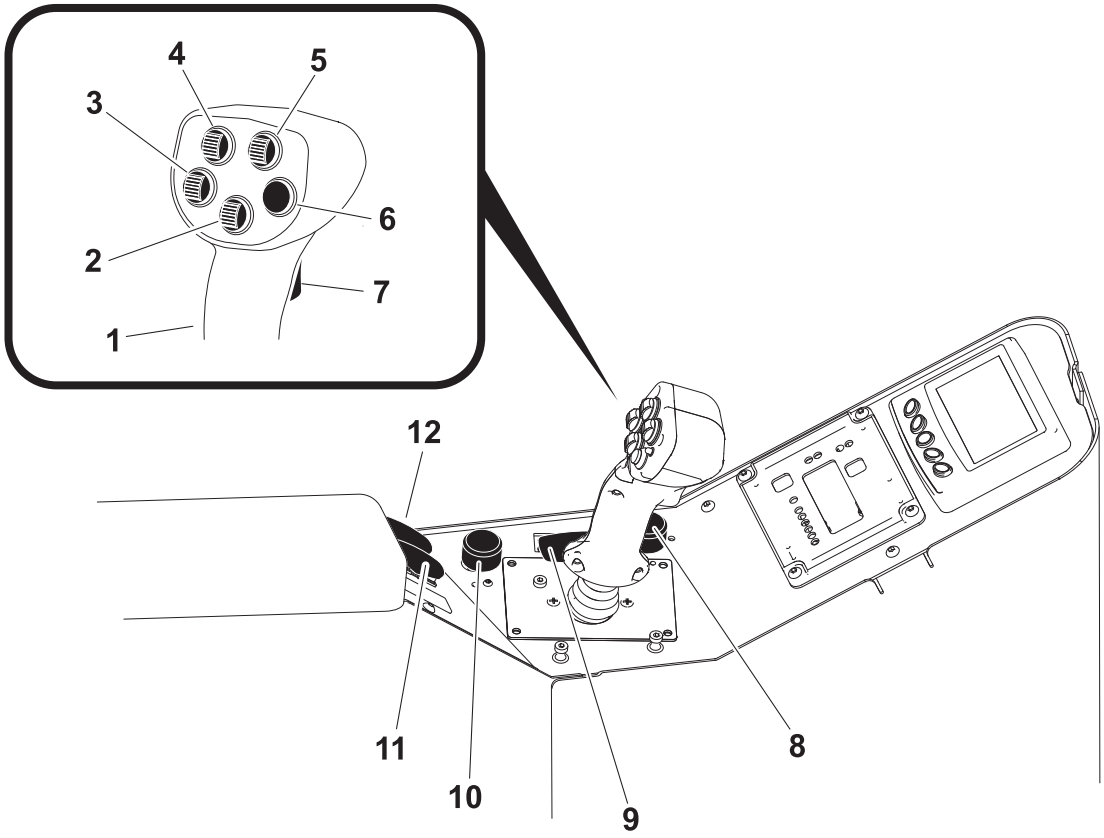

j37om073h.eps

1. Rotation control
2. Set/Resume switch
3. Drilling fluid quick fill switch
4. Drilling fluid pump switch
5. Engine throttle switch
6. Pipe lubricator switch
7. High-speed rotation switch
8. Carve potentiometer
9. Carve switch
10. Fluid flow control
11. High/Low rotation switch
12. Shuttle stop switch

Item	Description	Notes
1. Rotation control 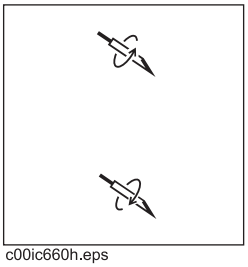 c00ic660h.eps	To rotate spindle counterclockwise (breakout), push. To rotate spindle clockwise (makeup), pull.	

Item	Description	Notes
2. Set/Resume switch 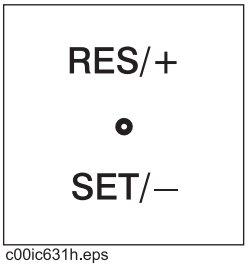 c00ic631h.eps	To resume operation or increase operation levels, press top. To set operating conditions or reduce operation levels, press bottom.	See "Cruise Control" on page 150.
3. Drilling fluid quick fill switch 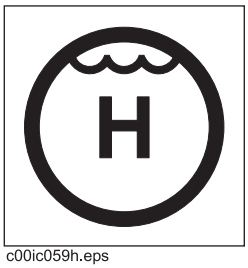 c00ic059h.eps	For full pump flow to fill pipe with fluid, press and hold. To return fluid flow to flow control setting, release.	
4. Drilling fluid pump switch 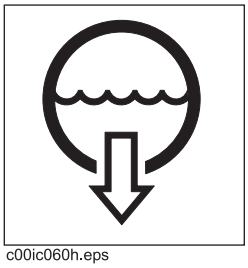 c00ic060h.eps	To turn on, press once. To turn off, press once.	
5. Engine throttle switch 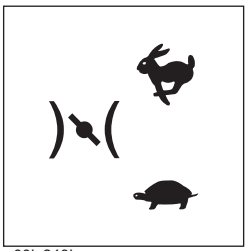 c00ic243h.eps	To increase speed, press top. To enable autothrottle mode, leave switch in top position. To disable autothrottle mode, return switch to center after desired speed is reached. To decrease speed, press bottom.	Autothrottle mode slows the engine to low throttle after 15 seconds of inactivity involving thrust, rotation, drilling fluid flow, or pipeloader functions. To return to high speed, activate thrust, rotation, drilling fluid, or an add/remove pipe cycle.

Item	Description	Notes
6. Pipe lubricator switch 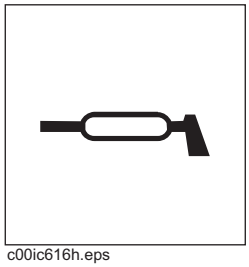 c00ic616h.eps	To apply joint compound, press.	
7. Two-speed rotation switch 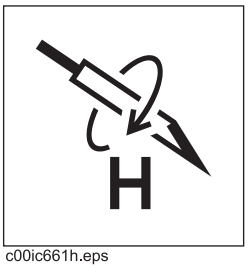 c00ic661h.eps	To rotate in high speed, press and hold. To return to regular rotation, release.	
8. Carve window control 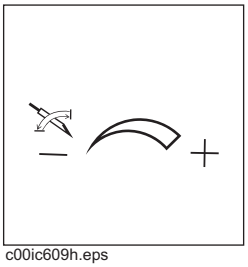 c00ic609h.eps	To increase carve window range, turn clockwise. To decrease carve window range, turn counterclockwise.	See "Use AutoCarve" on page 110.
9. AutoCarve switch 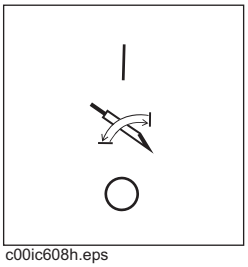 c00ic608h.eps	To enable autocarve, press top. To deactivate autocarve, press bottom.	Two-speed thrust is not allowed in autocarve mode.
10. Fluid flow control 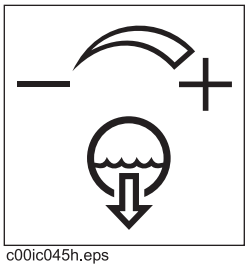 c00ic045h.eps	To increase flow, turn clockwise. To decrease flow, turn counterclockwise.	

Item	Description	Notes
11. Two-speed rotation switch 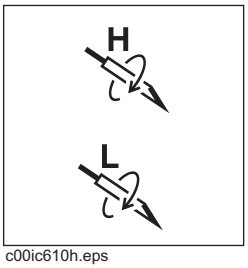 c00ic610h.eps	To rotate in high speed, press top. To rotate in low speed, press bottom.	
12. Shuttle stop switch 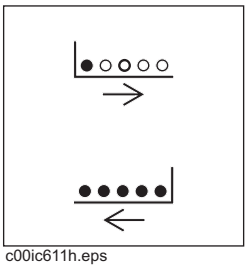 c00ic611h.eps	To lower shuttle stop, push up. To raise shuttle stop, pull down.	**IMPORTANT:** Look at pipe row indicator on drill frame to see which row shuttles will stop under.

Right Control Console

Lights

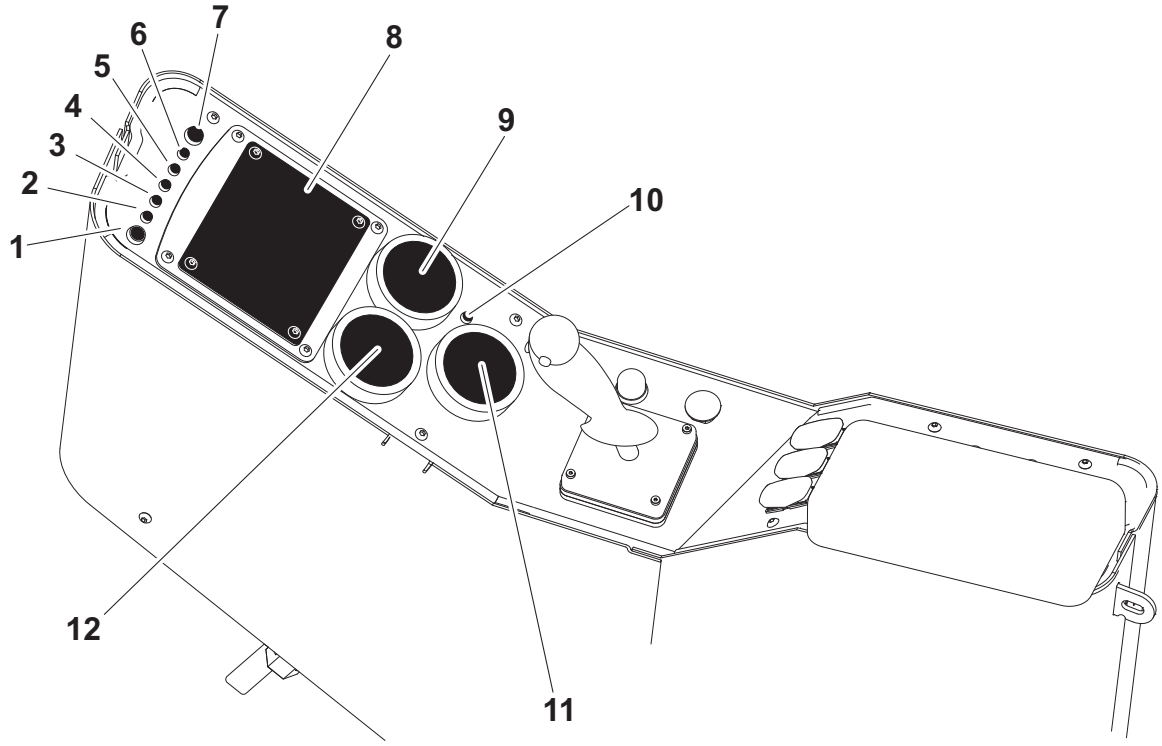

j37om008h.eps

1. Diagnostic light (red)
2. Rear stop status light
3. Rear home status light
4. Front home status light
5. Shuttle home status light
6. Operator presence light
7. Control cycle light (green)
8. Remote display
9. Rotation pressure gauge
10. Drilling fluid pump status indicator
11. Drilling fluid pressure gauge
12. Thrust pressure gauge

Item	Description	Notes
1. Diagnostic light (red) c00ic051h.eps	If system is OK, light should be off. If system may not be getting power, light should be on. If a non-essential diagnostic code is recorded, light should flash on and off for 10 seconds. If an essential diagnostic code is recorded, light should flash on for three seconds and off for half a second.	See "Diagnostic Codes" on page 152.
2. Rear stop status light 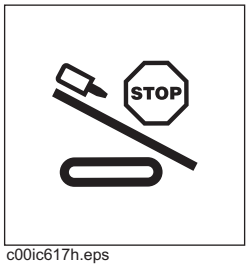 c00ic617h.eps	If carriage is at rear stop, light should be on. If carriage is away from rear stop, light should be off.	
3. Rear home status light 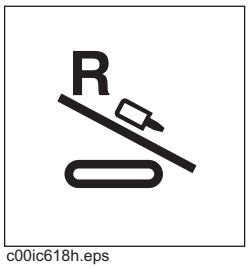 c00ic618h.eps	If carriage is at rear of drill frame, light should be on. If carriage is away from rear of drill frame, light should be off.	
4. Front home status light 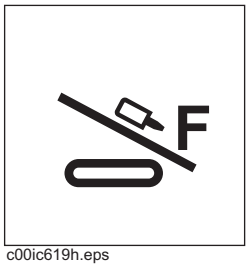 c00ic619h.eps	If carriage is at front of drill frame, light should be on. If carriage is away from front of drill frame, light should be off.	

Item	Description	Notes
5. Shuttle home status light c00ic620h.eps	If shuttle is retracted, light should be on. If shuttle is extended, light should be off.	
6. Operator presence light 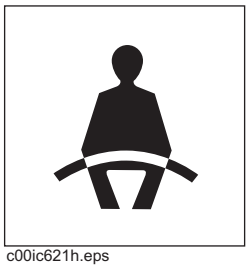 c00ic621h.eps	If seat switch is engaged, light should be on. If seat switch is not engaged, light should be off.	
7. Control cycle light (green) 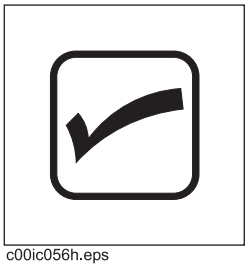 c00ic056h.eps	If nothing is being controlled, light should be off. If system is waiting for an action before starting cycle, light should flash on and off. If something is being controlled, light should be on. If control cycle is interrupted, light should flash twice quickly.	
8. Remote display	Displays information from the tracker at the drilling unit operator's station.	See tracking system operator's manual for information.
9. Rotation pressure gauge 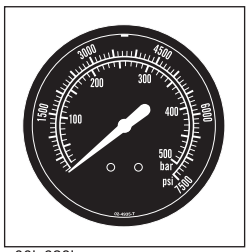 c00ic628h.eps	Displays hydraulic fluid pressure to rotation motor when spindle is turned clockwise.	

Item	Description	Notes
10. Drilling fluid pump status light	Lights when pump is on.	
11. Drilling fluid pressure gauge 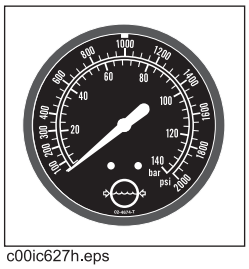 c00ic627h.eps	Displays drilling fluid pressure.	**IMPORTANT:** Monitor this gauge and drilling fluid flowmeter carefully to see if values are rising or falling at the same time. If they are not, nozzle might be plugged.
12. Thrust pressure gauge 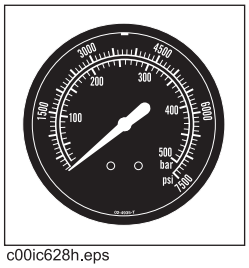 c00ic628h.eps	Displays hydraulic fluid pressure to thrust motor during thrust and pullback.	

Traditional Controls

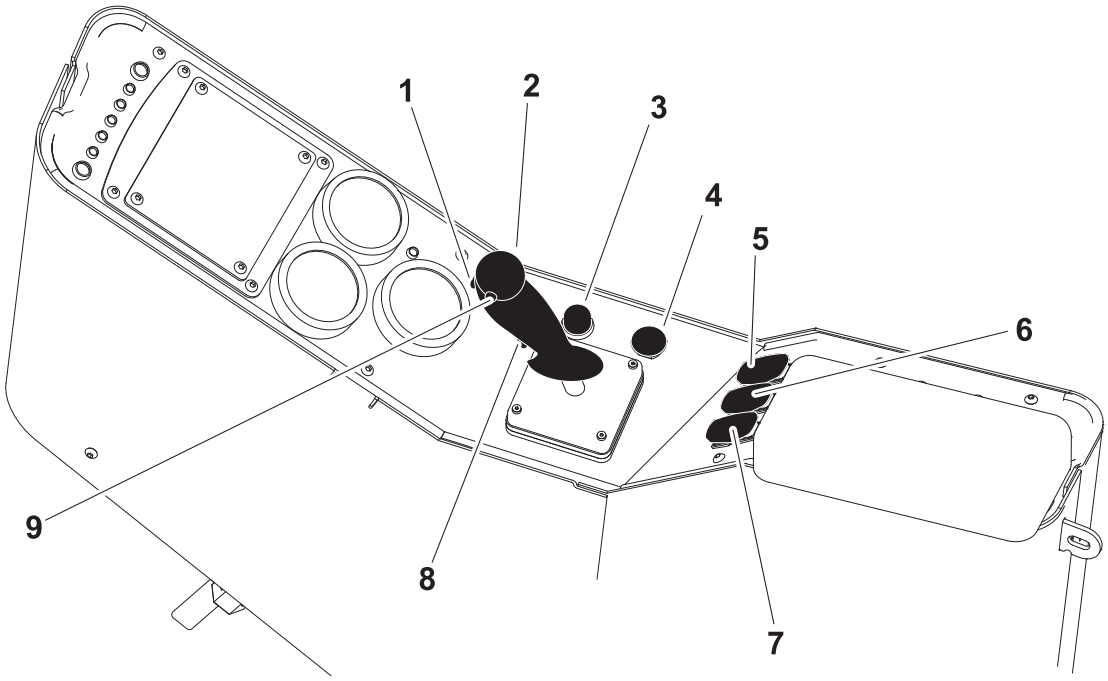

j37om009h.eps

1. Dual speed carriage control
2. Thrust and rotation control
3. Remote engine start switch
4. Remote engine stop switch
5. Anchor enable switch
6. Operator's station pivot switch
7. Add pipe/manual/remove pipe switch
8. Drilling fluid pump switch
9. Drilling fluid quick fill switch

Item	Description	Notes
1. Dual speed carriage control 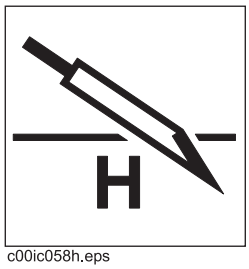 c00ic058h.eps	To increase carriage travel speed, push and hold. To return to normal carriage speed, release.	Use during bore or pullback **when no pipe is in spindle** to save time.

Item	Description	Notes
2. Thrust and rotation control 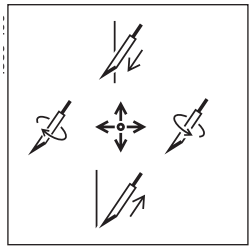	To move carriage forward, push. To move carriage backward, pull. To rotate spindle counterclockwise (breakout), move right. To rotate spindle clockwise (makeup), move left.	
3. Remote engine start switch 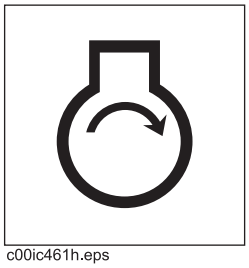 c00ic461h.eps	To start engine, press.	**IMPORTANT:** Ignition switch on rear console must be on to start engine remotely.
4. Remote engine stop switch 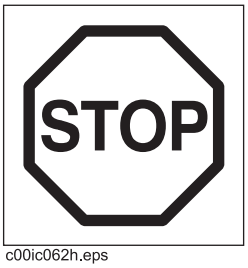 c00ic062h.eps	To stop engine, press. To restart engine, press remote engine start switch.	**IMPORTANT:** • If this switch is used to stop drilling unit, be sure to turn ignition switch off if machine will be left unattended for long periods of time. Battery discharge can occur. • If wrenches are engaged when remote stop is pressed, wrenches will remain engaged but could gradually open.
5. Anchor enable control 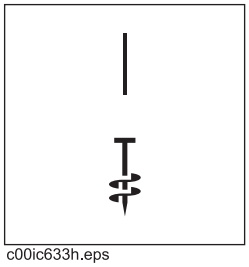 c00ic633h.eps	To activate pump and allow flow to the anchor valve, press. To return pump to standby mode and stop flow, sit in operator's seat.	

Item	Description	Notes
6. Operator's station pivot control switch 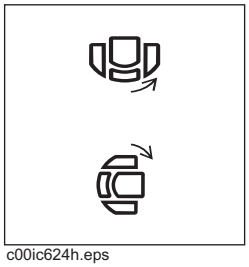 c00ic624h.eps	To pivot into drilling position, press top. To pivot into transport position, press bottom.	***NOTICE:*** Move carriage only when operator's station is in drilling position.
7. Add pipe/manual/ remove pipe switch 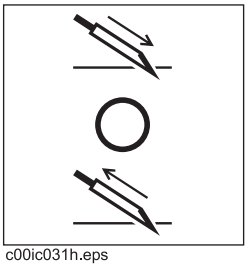 c00ic031h.eps	To select "add pipe" automated pipeloader function, press top. To use manual pipeloader controls, move to center. To select "remove pipe" automated pipeloader function, press bottom.	See "Add Pipe" on page 106. See "Remove Pipe" on page 116.
8. Drilling fluid pump switch 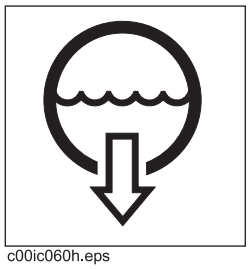 c00ic060h.eps	To turn on, press once. To turn off, press once.	
9. Drilling fluid quick fill switch 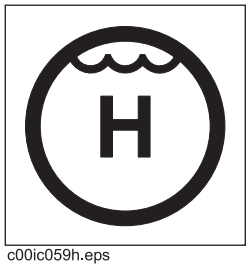 c00ic059h.eps	For full pump flow to fill pipe with fluid, press and hold. To return fluid flow to flow control setting, release.	

Alternate Controls

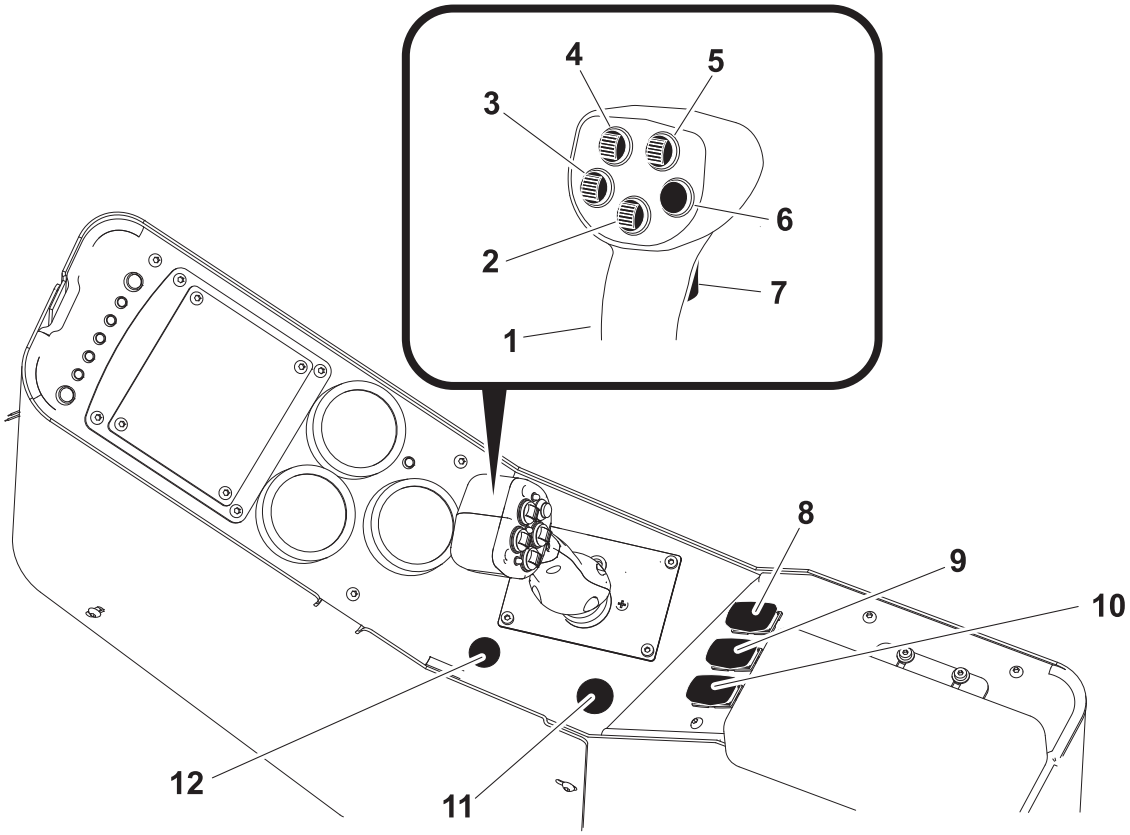

j37om074h.eps

1. Thrust control
2. Pipe lift switch
3. Pipe gripper switch
4. Rear wrench switch
5. Front wrench switch
6. Extend shuttle switch
7. Retract shuttle switch
8. Anchor enable switch
9. Operator's station pivot switch
10. Add pipe/manual/remove pipe switch
11. Remote engine stop switch
12. Remote engine start switch

Item	Description	Notes
1. Thrust control 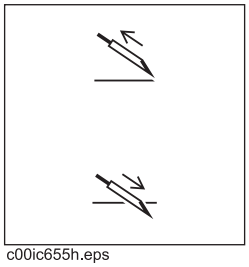 c00ic655h.eps	To move carriage forward, push. To move carriage backward, pull.	

Item	Description	Notes
2. Pipe lift switch 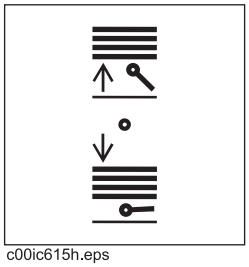 c00ic615h.eps	To raise, press top. To lower, press bottom.	
3. Pipe gripper switch 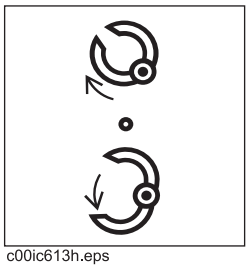 c00ic613h.eps	To close, press top. To open, press bottom.	
4. Rear wrench switch 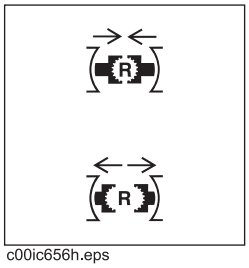 c00ic656h.eps	To clamp rear wrench, press top. To unclamp rear wrench, press bottom.	
5. Front wrench switch 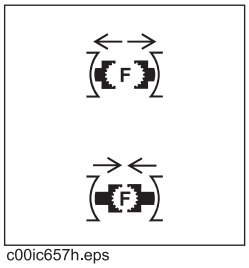 c00ic657h.eps	To unclamp front wrench, press top. To clamp front wrench, press bottom.	
6. Extend shuttle switch c00ic659h.eps	To move shuttle toward spindle, press.	

Item	Description	Notes
7. Retract shuttle switch 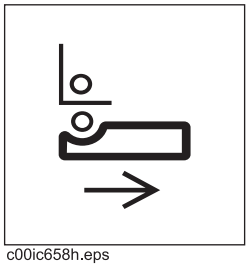 c00ic658h.eps	To move shuttle toward pipe box, press.	
8. Anchor enable control 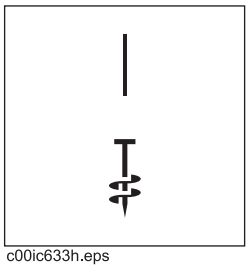 c00ic633h.eps	To activate pump and allow flow to the anchor valve, press. To return pump to standby mode and stop flow, sit in operator's seat.	
9. Operator's station pivot control switch 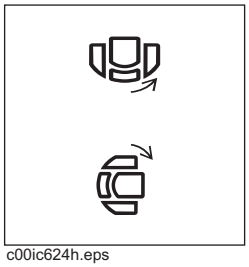 c00ic624h.eps	To pivot into drilling position, press top. To pivot into transport position, press bottom.	***NOTICE:*** Move carriage only when operator's station is in drilling position.
10. Add pipe/manual/ remove pipe switch 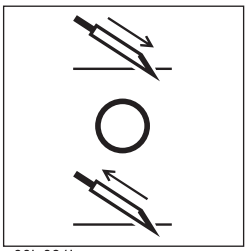 c00ic031h.eps	To select "add pipe" automated pipeloader function, press top. To use manual pipeloader controls, move to center. To select "remove pipe" automated pipeloader function, press bottom.	See "Add Pipe" on page 106. See "Remove Pipe" on page 116.

Item	Description	Notes
11. Remote engine stop switch c00ic062h.eps	To stop engine, press. To restart engine, press remote engine start switch.	**IMPORTANT:** • If this switch is used to stop drilling unit, be sure to turn ignition switch off if machine will be left unattended for long periods of time. Battery discharge can occur. • If wrenches are engaged when remote stop is pressed, wrenches will remain engaged but could gradually open.
12. Remote engine start switch 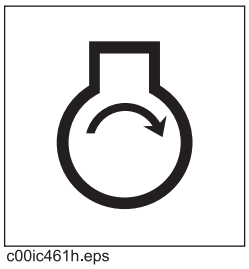 c00ic461h.eps	To start engine, press.	**IMPORTANT:** Ignition switch on rear console must be on to start engine remotely.

Anchoring System Console

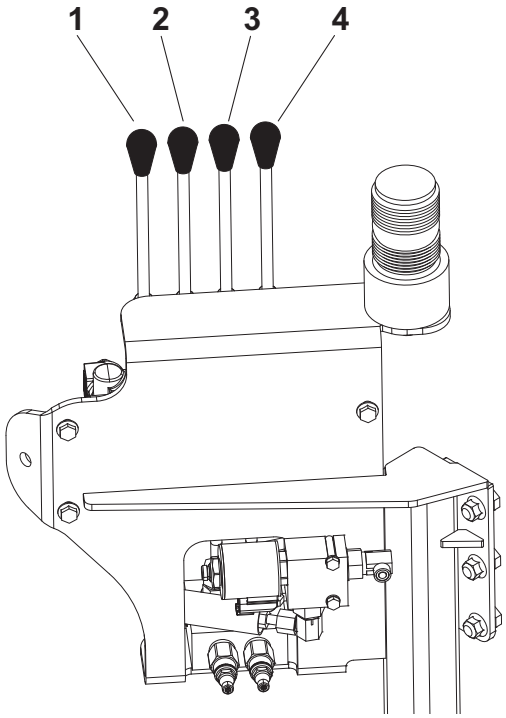

j37om013h.eps

1. Left rotation control
2. Left thrust control
3. Right rotation control
4. Right thrust control

Item	Description	Notes
1. Left rotation control 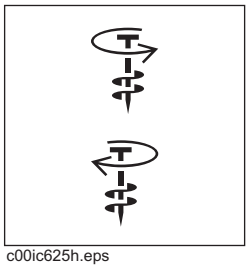 c00ic625h.eps	To drive anchor, pull. To remove anchor, push.	
2. Left thrust control 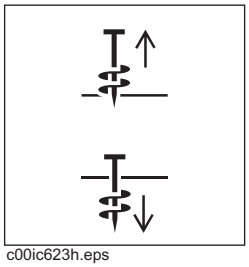 c00ic623h.eps	To move anchor down, pull. To move anchor up, push.	

Item	Description	Notes
3. Right rotation control 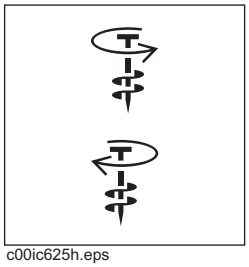 c00ic625h.eps	To drive anchor, pull. To remove anchor, push.	
4. Right thrust control 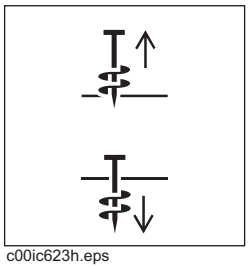 c00ic623h.eps	To move anchor down, pull. To move anchor up, push.	

Seat

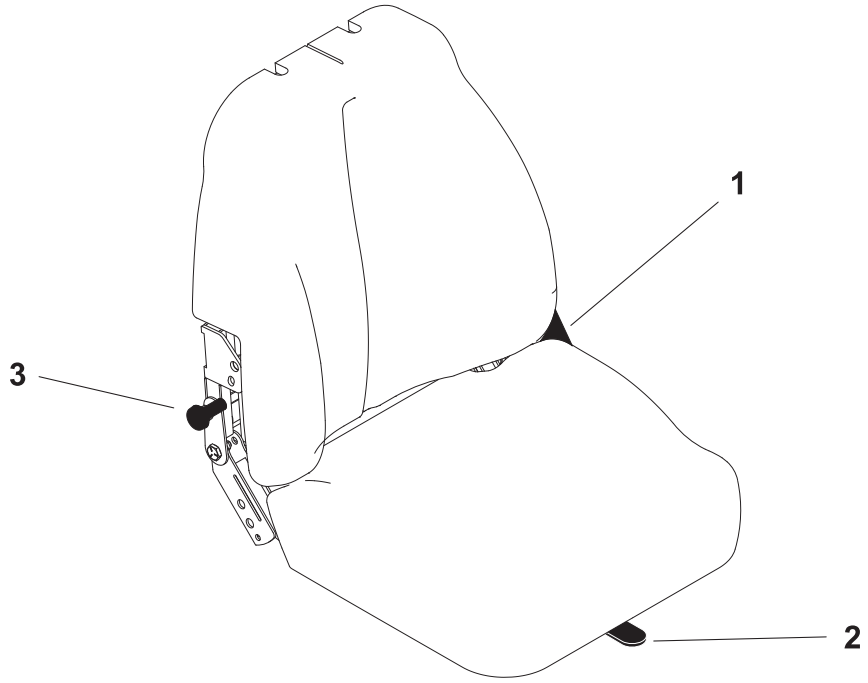

j37om010h.eps

1. Seat recline control
2. Seat slide control
3. Seat lumbar control

Item	Description	Notes
1. Seat recline control	To raise seatback, turn toward anchors. To recline seatback, turn toward engine compartment.	
2. Seat slide control	To slide forward or backward, move left. To lock seat in position, release.	
3. Seat lumbar control	To have least support, move up. To have medium support, move down. To have maximum support, move toward engine compartment.	

Cab Controls (optional)

EMERGENCY EXIT: Push rear window out to exit cab when door is blocked or inoperable.

Top/Rear

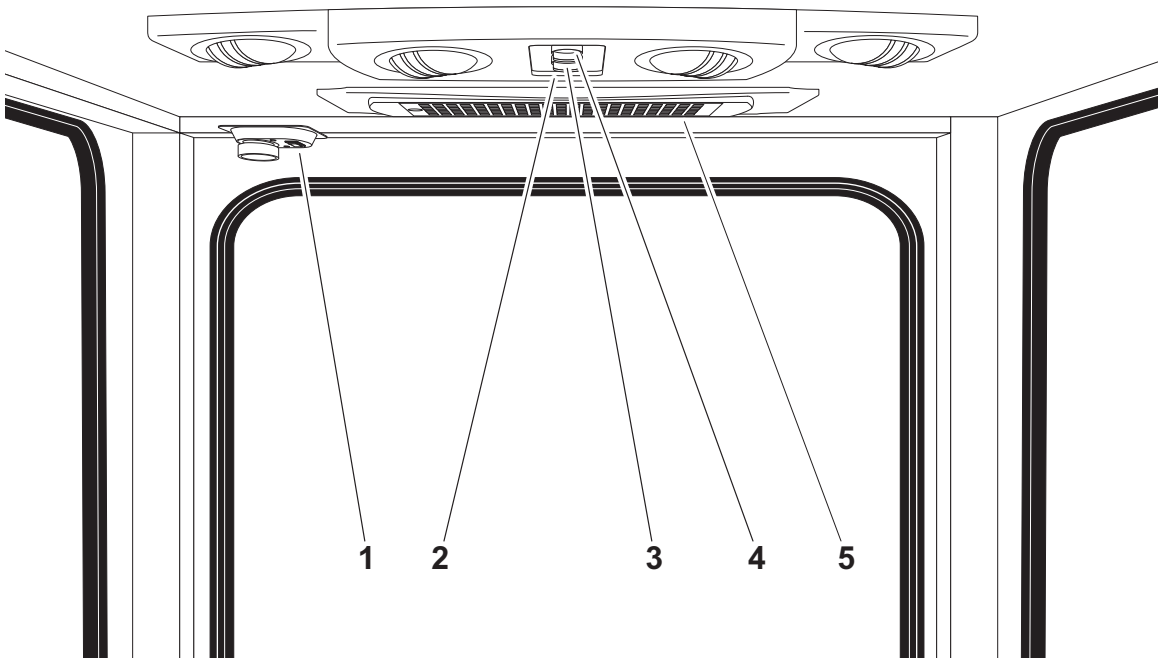

j29om002t.eps

1. Dome light switch
2. Air conditioner on/off switch
3. Air conditioner temperature dial
4. Air conditioner fan speed dial
5. Air conditioner filter

Item	Description	Notes
1. Dome light switch 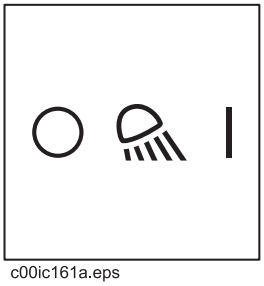 c00ic161a.eps	To turn on dome light, press right. To turn off dome light, press left.	

Item	Description	Notes
2. AC on/off switch 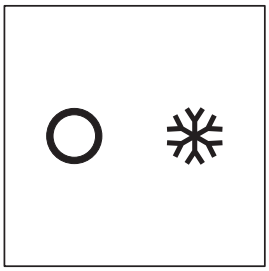 c00ic157a.eps	To turn air conditioner on, press left. To turn air conditioner off, press right.	
3. AC temperature dial 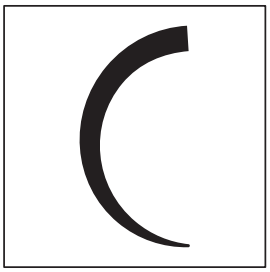 c00ic158a.eps	To adjust air temperature, turn dial.	
4. AC fan speed dial 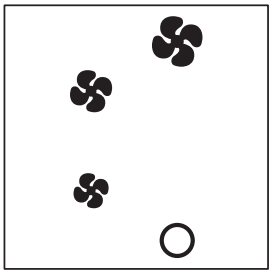 c00ic159a.eps	To adjust fan speed, turn dial.	
5. Air conditioner filter	Filters air coming into cab.	Clean or replace air filter as needed.

Front

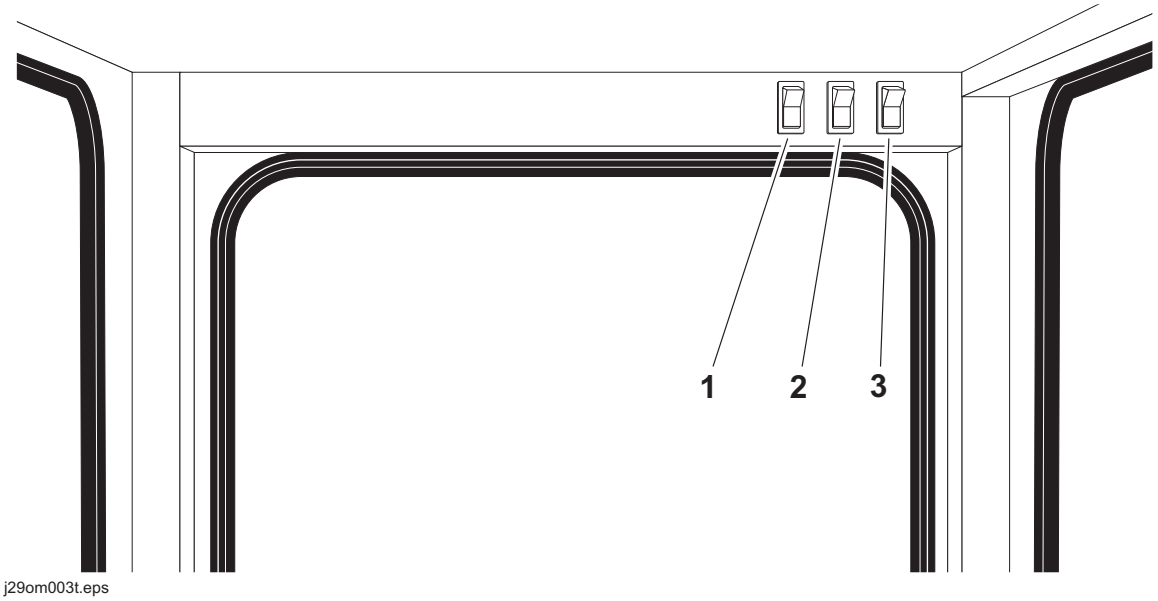

j29om003t.eps

1. Washer switch
2. Wiper switch
3. Worklight switch

Item	Description	Notes
1. Washer switch 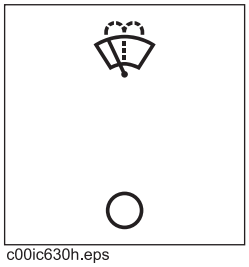 c00ic630h.eps	To spray washer fluid, press top. To stop, press bottom.	
2. Wiper switch 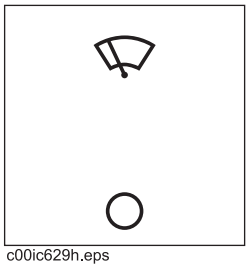 c00ic629h.eps	To start wiper blade, press top. To stop wiper blade, press bottom.	

Item	Description	Notes
3. Worklight switch 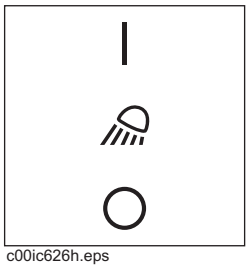 c00ic626h.eps	To turn on, press top. To turn off, press bottom.	

Engine Compartment Controls

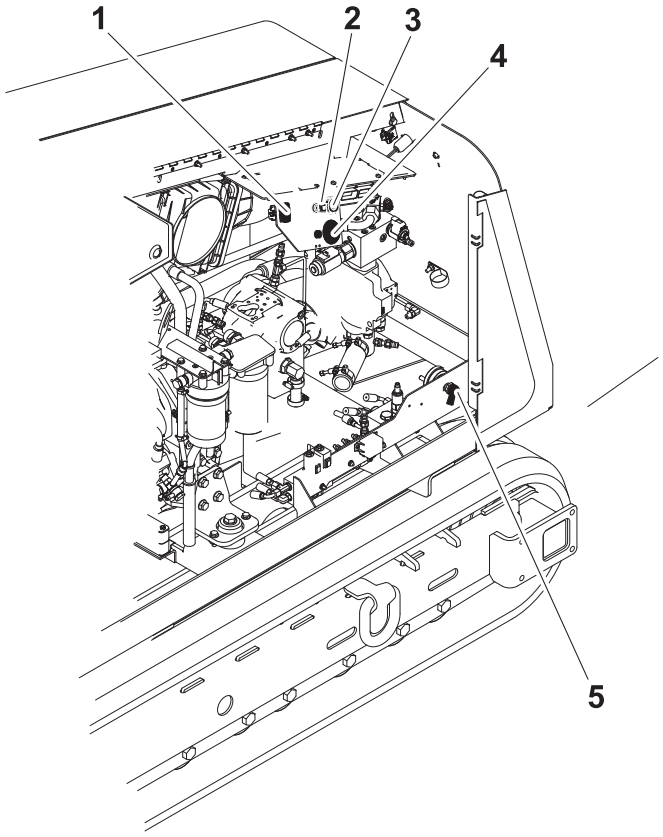

j37om006h.eps

1. Throttle switch
2. DrillLok™/Tracker Control key
3. J1939 CAN diagnostic port, engine
4. Air intake service indicator
5. Battery disconnect switch

Item	Description	Notes
1. Throttle switch 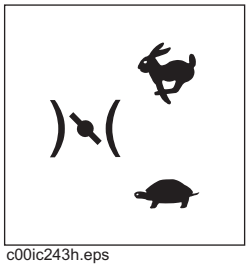 c00ic243h.eps	To increase engine speed, press top. To decrease engine speed, press bottom. To further increase or decrease speed, press additional times (or hold until desired speed is reached).	Use this switch only if throttle switch on console does not work.

Item	Description	Notes
2. DrillLok™/Tracker Control key 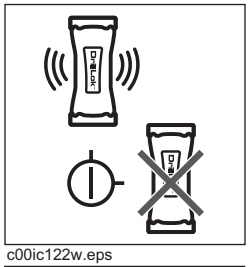 c00ic122w.eps 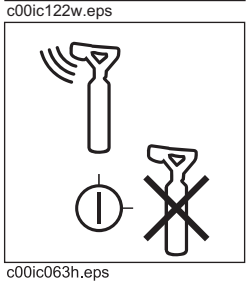 c00ic063h.eps	To allow tracker operator to stop thrust and rotation, move key to enable position (up). To override DrillLok/tracker control mode, move key to override position (right).	**IMPORTANT:** Remove key and keep in tracker operator's possession.
3. J1939 CAN diagnostic port, engine	For use only by qualified Ditch Witch® technicians.	
4. Air intake restriction indicator 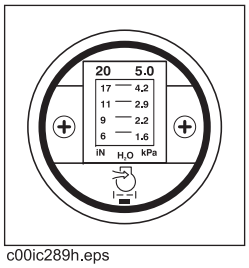 c00ic289h.eps	Shows air intake restriction.	Replace the air filter elements when the indicator reaches the red zone. See "Change Air Filter" on page 199.
5. Battery disconnect switch 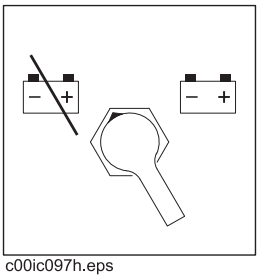 c00ic097h.eps	To connect, move clockwise. To disconnect, move counterclockwise.	**IMPORTANT:** Use battery disconnect switch when servicing, welding, and during long-term storage.

Miscellaneous Controls

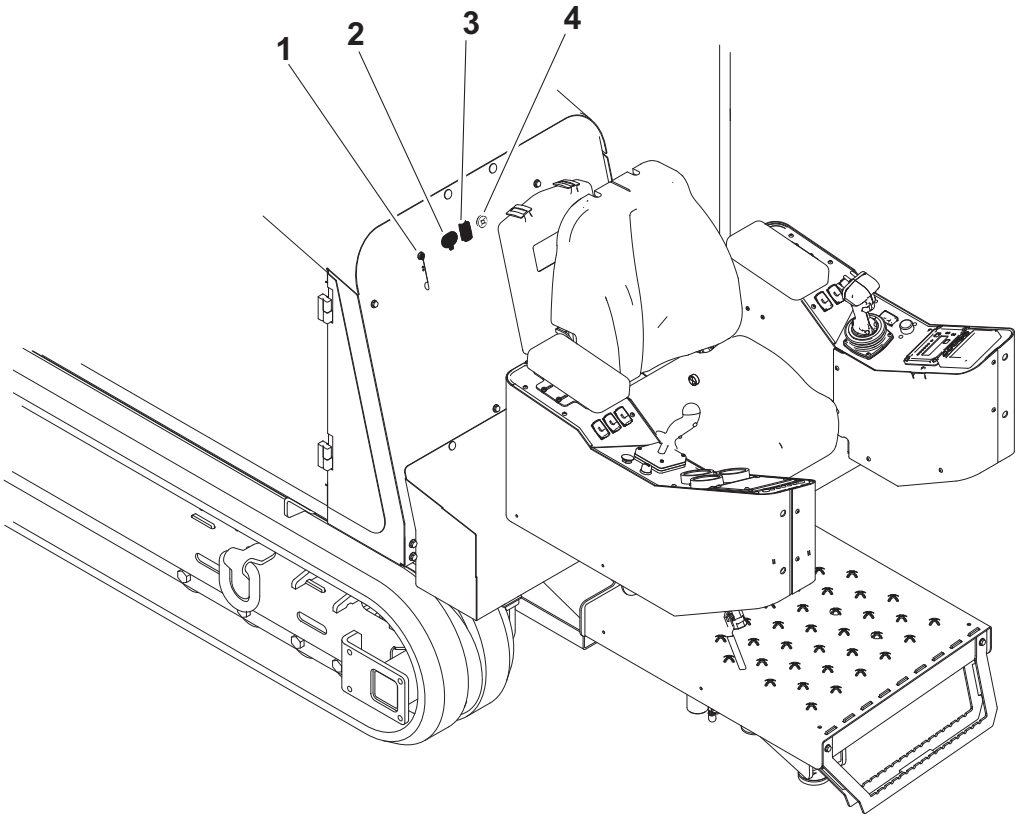

j37om005h.eps

1. EDT diagnostic port, controller
2. Auxiliary outlet
3. Work light switch
4. Audible alarm

Item	Description	Notes
1. EDT diagnostic port, controller	For use only by qualified Ditch Witch® technicians.	
2. Auxiliary outlet	Supplies power to 12V devices.	
3. Work light switch 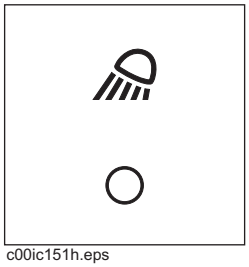 c00ic151h.eps	To turn on, press top. To turn off, press bottom.	

Item	Description	Notes
4. Audible alarm	Beeps when key is in run position, but engine is not running. Sounds continuously when hydraulic fluid temperature is too high.	

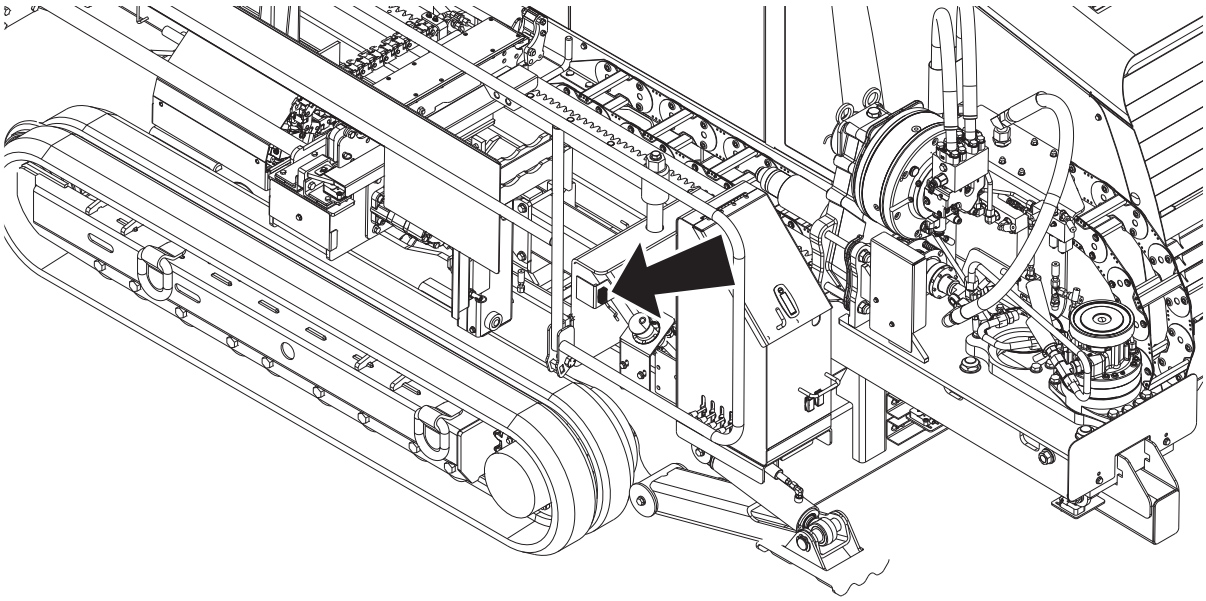

j37om078h.eps

Item	Description	Notes
Shuttle Lockout Switch 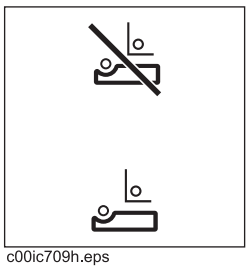 c00ic709h.eps	To prevent shuttle function, press top. To allow shuttle function, press bottom.	Use when adding/removing single pieces of pipe.

ESID

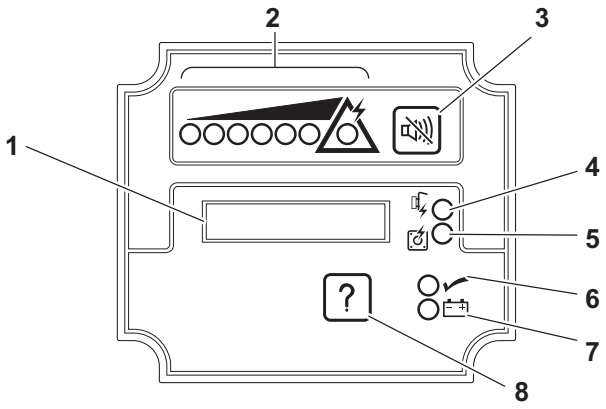

j07om042h.eps

1. Alphanumeric display
2. Strike indicator
3. Alarm interrupt button
4. Voltage problem indicator
5. Current problem indicator
6. OK indicator
7. Electrical power supply indicator
8. Self test button

Item	Description	Notes
1. Alphanumeric display	Display amount of current and voltage being detected as a percentage of strike condition. The line with the "V" shows voltage reading and the line with the "A" shows current reading.	
2. Strike indicator 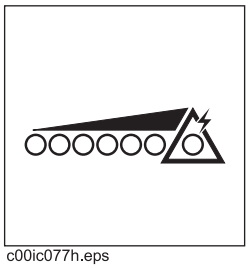 c00ic077h.eps	Red lights come on as values in display increase. Light in triangle represents strike warning condition and will trigger alarm(s) and strobe(s). Remember that system can go from one or two lights to an electric strike immediately.	***NOTICE:*** The ESID does not indicate proximity to electric lines. System will activate only when voltage and/or amperage detected at the drilling unit are above threshold minimum limits.

Item	Description	Notes
3. Alarm interrupt button c00ic078h.eps	To turn off strike alarm at drilling unit, press.	
4. Voltage problem indicator 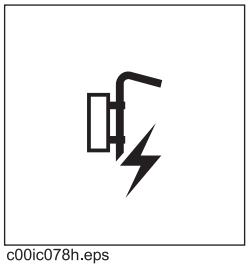 c00ic078h.eps	Red light indicates a voltage indicator problem.	See "Troubleshoot Strike System" on page 125.
5. Current problem indicator 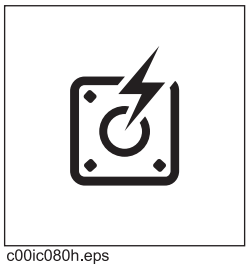 c00ic080h.eps	Red light indicates a current indicator problem.	See "Troubleshoot Strike System" on page 125.
6. OK indicator 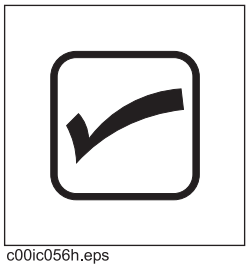 c00ic056h.eps	Green light means system self test detected no problems. Strike system is ready to operate.	

Item	Description	Notes
7. Electrical power supply indicator 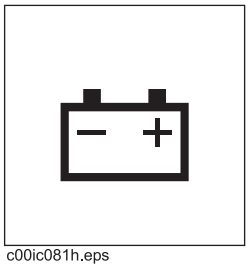 c00ic081h.eps	Green light means control box has sufficient electrical power for operation. Strike system is ready to operate if OK indicator is also on.	
8. Self test button c00ic075h.eps	To start manual self test, press. To reset system after a strike has been detected, press.	Checks all systems and circuits except voltage limiter. ***NOTICE:*** See "If an Electric Line is Damaged" on page 18.

Operation Overview

Chapter Contents

Planning 66

Setting Up at Jobsite 66

Drilling 67

Backreaming 68

Leaving Jobsite 68

Storing Equipment 68

Planning

1. Gather information about jobsite. See page 71.
2. Inspect jobsite. See page 72.
3. Classify jobsite. See page 74.
4. Plan bore path. See page 76.
5. Check supplies and prepare equipment. See page 85.
6. Load equipment. See page 92.

Setting Up at Jobsite

1. Prepare jobsite. See page 84.
2. Mix drilling fluid. See page 129.
3. Unload drilling unit from trailer. See page 94.
4. Assemble drill string. See page 86.
5. Position drilling unit and drill frame. See page 99.
6. Assemble strike system. See page 123.
7. Anchor drilling unit. See page 121.
8. Connect fluid system. See page 99.
9. Calibrate tracker with beacon that will be installed in beacon housing. See tracker operator's manual.

Drilling

1. Start system. See page 100.
2. Engage DrillLok™/tracker control if desired. See page 133.
3. Drill first pipe. See page 105.
4. Record bore path. See page 112.
5. Enable automated pipeloader system. See page 105.
6. Add pipe. See page 106.
7. Drill remaining pipes in pipe box.
   - Correct direction. See page 108.
   - Engage cruise control. See page 150.
8. Add additional drill pipe to empty box (see page 146) to complete bore.
9. Surface drill head. See page 113.
   - Remove drill head.

Backreaming

1. Assemble backream string. See page 115.
2. Start drilling unit and adjust throttle.
3. Set drilling fluid flow. Check that fluid flows through all nozzles.
4. Remove extra drill pipe from pipe box (see page 148) to complete backream.
5. Remove remaining pipe to complete backream.
6. Remove pullback device. See page 118.

Backreaming Tips

- Plan backreaming job before drilling. Plan bore path as straight as possible. Check bend limits of pullback material. Check that appropriate pullback devices are on hand.
- Keep all bends as gradual as possible.
- Drilling fluid quality is a key factor in backreaming success. Contact your Ditch Witch® dealer for information on testing water, selecting additives, and mixing drilling fluid.
- Backreaming requires more fluid than drilling. Make sure enough fluid is used.

Leaving Jobsite

1. Remove downhole tools.
2. Remove anchors. See page 122.
3. Rinse unit and downhole tools. See page 168.
4. Disassemble strike system and disconnect from fluid system. See page 123.
5. Stow tools. See page 169.
6. Load unit onto trailer. See page 92.

Storing Equipment

1. For cold weather storage, antifreeze drilling unit. See page 166.
2. For long-term storage, disconnect battery disconnect switch.

Prepare

Chapter Contents

Gather Information 71

- Review Job Plan 71
- Notify One-Call Services 71
- Examine Pullback Material 71
- Arrange for Traffic Control 71
- Plan for Emergency Services 71

Inspect Site 72

- Identify Hazards 72
- Select Start and End Points 73

Classify Jobsite. 74

- Inspect Jobsite 74
- Select a Classification 74
- Apply Precautions 75

Plan Bore Path 76

- Recommended Bend Limits 77
- Entry Pitch. 80
- Minimum Setback 81
- Minimum Depth 81
- Bore Path Calculator 82

Prepare Jobsite 84

- Mark Bore Path 84
- Prepare Entry Point 84

Check Supplies and Prepare Equipment 85

- Check Supplies 85
- Prepare Equipment 86
- Assemble Accessories 86

Gather Information

A successful job begins before the bore. The first step in planning is reviewing information already available about the job and jobsite.

Review Job Plan

Review blueprints or other plans and make sure you have taken bore enlargement during backreaming and pullback into account. Check for information about existing or planned structures, elevations, or proposed work that may be taking place at the same time.

Notify One-Call Services

Contact your local One-Call (811 in USA) or the One-Call referral number (888-258-0808 in USA and Canada) to have underground utilities located before digging. Also contact any utilities that do not participate in the One-Call service. Mark proposed path with white paint prior to contacting One-Call or utilities.

Examine Pullback Material

Ask for a sample of the material you will be pulling back. Check its weight and stiffness. Contact the manufacturer for bend radius information. Check that you have appropriate pullback devices.

Arrange for Traffic Control

If working near a road or other traffic area, contact local authorities about safety procedures and regulations.

Plan for Emergency Services

Have the telephone numbers for local emergency and medical facilities on hand. Check that you will have access to a telephone.

Inspect Site

Inspect jobsite before transporting equipment. Check for the following:

- overall grade or slope
- changes in elevation such as hills or open trenches
- obstacles such as buildings, railroad crossings, or streams
- signs of utilities (See “Inspect Jobsite” on page 74.)
- traffic
- access
- soil type and condition
- water supply
- sources of locator and tracker interference (rebar, railroad tracks, etc.)

Take soil samples from several locations along bore path to determine best bit and backreamer combinations.

Identify Hazards

Identify safety hazards and classify jobsite. See “Classify Jobsite” on page 74.

WARNING Jobsite hazards could cause death or serious injury. Use correct equipment and work methods. Use and maintain proper safety equipment. 274-050; 274-724 (2P)

To help avoid injury:

- Wear personal protective equipment including hard hat, safety eye wear, and hearing protection.
- Do not wear jewelry or loose clothing.
- Notify One-Call and companies which do not subscribe to One-Call.
- Comply with all utility notification regulations before digging or drilling.
- Verify location of previously marked underground hazards.
- Mark jobsite clearly and keep spectators away.

Remember, jobsite is classified by hazards in place -- not by line being installed.

Select Start and End Points

Select one end to use as a starting point. Consider the following when selecting a starting point:

Slope

Fluid system should be parked on a level site. Consider how slope will affect drilling unit setup, bending pipe, and fluid flow out of hole.

Traffic

Vehicle and pedestrian traffic must be a safe distance from drilling equipment. Allow at least 10’ (3 m) buffer zone around equipment.

Space

Check that starting and ending points allow enough space for gradual pipe bending. See “Minimum Setback” on page 81.

Check that there is enough space to work and to set up electric strike system.

Comfort

Consider shade, wind, fumes, and other site features.

Drill downhill when possible so fluid will flow away from drilling unit.

Classify Jobsite

Inspect Jobsite

- Follow U.S. Department of Labor regulations on excavating and trenching (Part 1926, Subpart P) and other similar regulations.
- Contact your local One-Call (811 in USA) or the One-Call referral number (888-258-0808 in USA and Canada) to have underground utilities located before digging. Also contact any utilities that do not participate in the One-Call service. Mark proposed path with white paint prior to contacting One-Call or utilities.
- Inspect jobsite and perimeter for evidence of underground hazards, such as:
  - "buried utility" notices
  - utility facilities without overhead lines
  - gas or water meters
  - junction boxes
  - drop boxes
  - light poles
  - manhole covers
  - sunken ground
- Have an experienced locating equipment operator sweep area within 20' (6 m) to each side of proposed path. Verify previously marked line and cable locations.
- Mark location of all buried utilities and obstructions.
- Classify jobsite.

Select a Classification

Jobsites are classified according to underground hazards present.

If working . . .	then classify jobsite as . . .
within 10' (3 m) of a buried electric line	electric
within 10' (3 m) of a natural gas line	natural gas
in concrete, sand, or granite which is capable of producing crystalline silica (quartz) dust	crystalline silica (quartz) dust
within 10' (3 m) of any other hazard	other

NOTICE: If you have any doubt about jobsite classification, or if jobsite might contain unmarked hazards, take steps outlined previously to identify hazards and classify jobsite before working.

Apply Precautions

Once classified, precautions appropriate for jobsite must be taken.

Electric Jobsite Precautions

Use one or both of these methods.

- Expose line by careful hand digging or soft excavation. Use beacon to track bore path. If utility must be crossed, tracker operator must watch the drill head during drilling and backreaming. The tracker operator must have communication with the drill operator or DrillLok™/tracker control must be enabled with the DrillLok/tracker control key in the tracker operator's possession.
- Have service shut down while work is in progress. Have electric company test lines before returning them to service.

Natural Gas Jobsite Precautions

Position equipment upwind from gas lines and use one or both of these methods.

- Expose lines by careful hand digging or soft excavation. Use beacon to track bore path. If utility must be crossed, tracker operator must watch the drill head during drilling and backreaming. The tracker operator must have communication with the drill operator or DrillLok/tracker control must be enabled with the DrillLok/tracker control key in the tracker operator's possession.
- Have gas shut off while work is in progress. Have gas company test lines before returning them to service.

Crystalline Silica (Quartz) Dust Precautions

Crystalline silica dust is a naturally occurring substance found in soil, sand, concrete, granite, and quartz. Breathing silica dust particles while cutting, drilling, or working materials may cause lung disease or cancer. To reduce exposure:

- Use water spray or other means to control dust.
- Refer to U.S. Department of Labor Occupational Safety and Health Administration guidelines to learn more about appropriate breathing protection and permissible exposure limits.

Other Jobsite Precautions

You may need to use different methods to safely avoid other underground hazards. Talk with those knowledgeable about hazards present at each site to determine which precautions should be taken or if job should be attempted.

Plan Bore Path

Plan the bore path, from entry to end, before drilling begins. Ditch Witch® bore planning software is available for planning your bore path. This special software can be run in the field using a laptop computer. See your Ditch Witch dealer for details.

If not using bore planning software, mark the bore path on the ground with spray paint or flags, or record it on paper for operator reference.

For complicated bores, consult an engineer. Have the jobsite surveyed and bore path calculated. Be sure the engineer knows minimum entry pitch, bend limits of drill pipe, bend and tension limits of pullback material, pipe lengths, and location of all underground utilities.

For less complicated bores, plan the bore based on four measurements:

- recommended bend limit
- entry pitch
- minimum setback
- minimum depth

IMPORTANT: See the following pages for more information about these measurements. If not using bore planning software, see “Bore Path Calculator” on page 82 and use these measurements to help plan your bore.

Recommended Bend Limits

Ditch Witch® drill pipes are designed to bend slightly during operation. Slight bending allows for steering and correcting direction. Bending beyond recommended limits will cause damage that might not be visible. This damage adds up and will later lead to sudden drill pipe failure.

IMPORTANT: Consider recommended bend limits during any bend, not just during bore entry.

Pipe Pitch

Ditch Witch drill pipe is tested to bend at a maximum percent pitch.

Make sure pitch (A) changes no more than 8.0% over the full length of each Power Pipe® HD pipe and no more than 9.3% for Power Pipe Forged pipe.

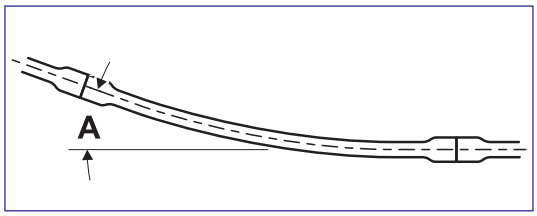

j07om003c.eps

NOTICE: Bending drill pipe more sharply than recommended will damage pipe and cause failure over time. Changes in pitch must be **equally distributed** over the length of a pipe. Maximum changes in pitch within 1-2’ (300-600 mm) of pipe create sharp bends that will damage pipe.

Monitor the pitch of each pipe with the tracker remote display on the operator’s console.

Bend Radius

JT25 Power Pipe® drill pipes have a tested minimum bend radius of 123’ (37.5 m). This means that a 90-degree bend in the bore path:

- has a radius (A) of 123’ (37.5 m)
- requires approximately 193’ (58.8 m) of drill pipe (B).

JT25 Power Pipe® Forged drill pipes have a tested minimum bend radius of 108.2’ (33 m). This means that a 90-degree bend in the bore path:

- has a radius (A) of 108’ (32.9 m)
- requires approximately 170’ (51.8 m) of drill pipe (B).

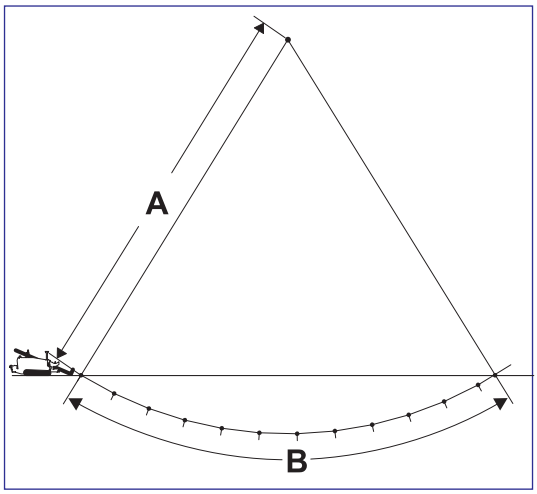

j07om078h.eps

NOTICE: Bending drill pipe more sharply than recommended will damage the pipe and cause failure over time.

- If bend radius is reduced, drill pipe life is reduced.
- If bend radius is increased, drill pipe life is increased.

IMPORTANT: Use the charts on the next page to keep bends within safe limits.

Pipe-By-Pipe Bend Limits

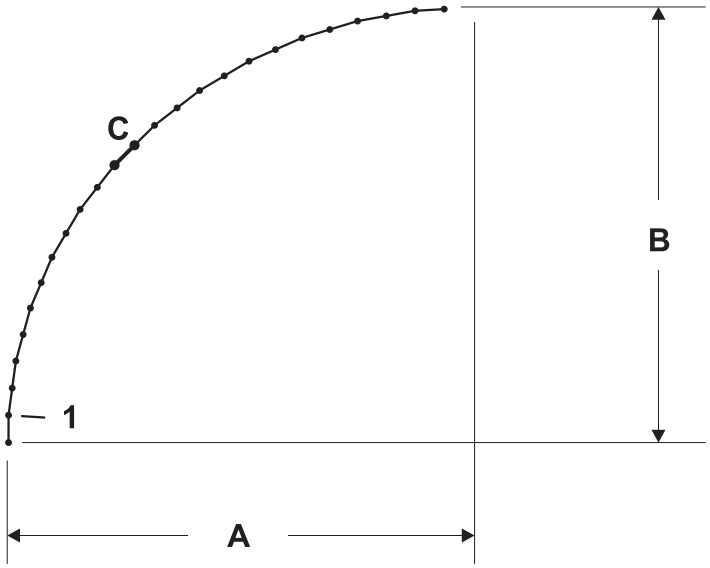

th.eps

JT Power Pipe® HD

Pipe (C)	Forward (B)	Deflection (A)	Pipe (C)	Forward (B)	Deflection (A)
1	9’ 10” (3.0 m)	0’ 4.7” (0.12 m)	**11**	94’ 9.9” (28.90 m)	44’ 7.9” (13.61 m)
2	19’ 7.2” (5.97 m)	1’ 6.9” (0.48 m)	**12**	100’ 9.4” (30.72 m)	52’ 5.9” (16 m)
3	29’ 3.0” (8.92 m)	3’ 6.3” (1.07 m)	**13**	106’ 1.2” (32.34 m)	60’ 9.3” (18.52 m)
4	38’ 8.5” (11.8 m)	6’ 3.0” (1.91 m)	**14**	110’ 8.8” (33.75 m)	69’ 5.5” (21.17 m)
5	47’ 11.0” (14.61 m)	9’ 8.6” (2.96 m)	**15**	114’ 7.9” (34.95 m)	78’ 5.8” (23.92 m)
6	56’ 9.8” (17.32 m)	13’ 10.9” (4.24 m)	**16**	117’ 10.2” (35.92 m)	87’ 9.5” (26.76 m)
7	65’ 4.3” (19.92 m)	18’ 9.6” (5.73 m)	**17**	120’ 3.5” (36.66m)	97’ 3.9” (29.66 m)
8	73’ 5.7” (22.4 m)	24’ 4.3” (7.42 m)	**18**	121’ 11.5” (37.17m)	107’ 0.3” (32.62 m)
9	81’ 1.6” (24.73 m)	30’ 6.6” (9.31 m)	**19**	122’ 10.1” (37.44 m)	116’ 9.9” (35.61 m)
10	88’ 3.1” (26.90 m)	37’ 4.0” (11.38 m)	**20**	123’ 0” (37.49 m)	123’ 0” (37.49 m)

Power Pipe® Forged

Pipe (C)	Forward (B)	Deflection (A)	Pipe (C)	Forward (B)	Deflection (A)
1	0’ 5.5” (0.14 m)	9’ 11.8” (3.04 m)	**10**	43’ 0.2” (13.11 m)	86’ 4.3” (26.32 m)
2	1’ 10.1” (0.56 m)	19’ 10.6” (6.06 m)	**11**	51’ 3.1” (15.62 m)	92’ 0.1” (28.04 m)
3	4’ 1.6” (1.26 m)	29’ 7.4” (9.03 m)	**12**	60’ 0” (18.29 m)	96’ 10.4” (29.52 m)
4	7’ 3.7” (2.23 m)	39’ 1.1” (11.92 m)	**13**	69’ 1.7” (21.07 m)	100’ 10.9” (30.76 m)
5	11’ 4.2” (3.46 m)	48’ 2.9” (14.7 m)	**14**	78’ 7.5” (23.96 m)	104’ 0.9” (31.72 m)
6	16’ 2.6” (4.94 m)	56’ 11.7” (17.37 m)	**15**	88’ 4.2” (26.92 m)	106’ 4.4” (32.42 m)
7	21’ 10.4” (6.66 m)	65’ 2.6” (19.88 m)	**16**	98’ 3.0” (29.95 m)	107’ 8.9” (32.84 m)
8	28’ 3.0” (8.61 m)	72’ 10.9” (22.22 m)	**17**	108’ 2” (32.97 m)	108’ 2” (32.97 m)
9	35’ 3.9” (10.77 m)	79’ 11.7” (24.38 m)			

Entry Pitch

Entry pitch is the slope of the drill frame compared with the slope of the ground. Determine entry pitch one of two ways:

1. **With Pitch Beacon**
   - Lay pitch beacon on the ground and read pitch.
   - Lay pitch beacon on drill frame and read pitch.
   - Subtract ground pitch from drilling unit pitch.
2. **With Measurements**
   - Measure from the ground to front end of drill frame (H1).
   - Measure from the ground to back end of frame (H2).
   - Subtract (H1) from (H2). Record this number.
   - Measure the distance between front and back points (C).
   - Divide (H2-H1) by (C), then multiply by 100. This is your pitch.

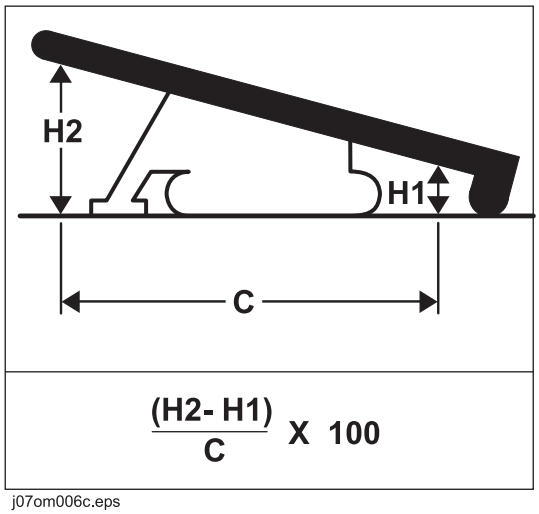

j07om006c.eps

IMPORTANT: A shallow entry pitch (A1) allows you to reach horizontal sooner and with less bending. Increasing entry pitch (A2) makes minimum setback longer and deeper.

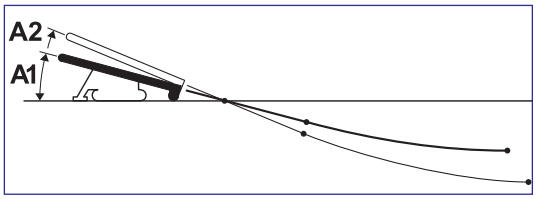

j07om007c.eps

Minimum Setback

Setback is the distance from the entry point to where pipe becomes horizontal (B1).

NOTICE: If setback is too small (B2), you will exceed bend limits and damage the pipe.

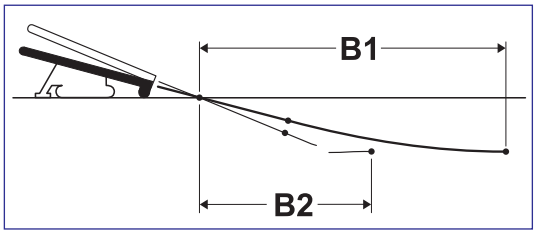

j07om008c.eps

Minimum Depth

Because you must bend pipe gradually, entry pitch and bend limits determine how deep the pipe will be when it becomes horizontal. This is called the **minimum depth**.

- To reduce minimum depth (D1), reduce entry pitch. This also decreases setback.
- To increase minimum depth (D2), increase entry pitch. This also increases setback.

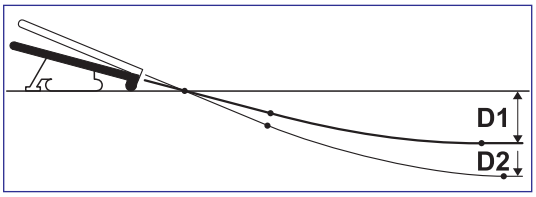

j07om009c.eps

Bore Path Calculator

Entry pitch, setback, and minimum depth work together with bend limits to determine the bore path. To find the setback (B) and entry pitch (A) that will take you to the desired minimum depth (D), use the chart below.

JT25 Power Pipe®

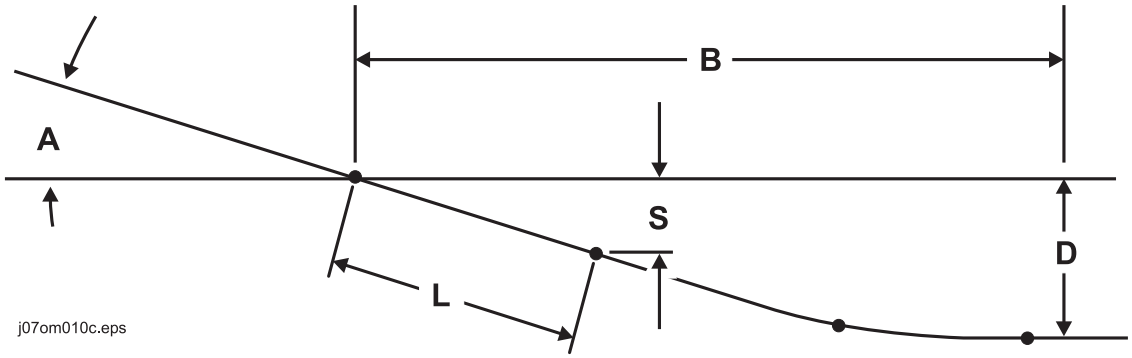

Minimum depth (D)	Entry pitch (A)	Setback (B)	Depth to begin steering (S)
2 ft 11 in (0.89 m)	16% / 9.0°	27 ft 10 in (8.48 m)	1 ft 5 in (0.43 m)
3 ft 10 in (1.17 m)	29% / 10.8°	31 ft 8 in (9.65 m)	1 ft 8 in (0.51 m)
4 ft 11 in (1.5 m)	22% / 12.7°	35 ft 6 in (10.82 m)	1 ft 11 in (0.58 m)
6 ft 2 in (1.88 m)	26% / 14.5°	39 ft 3 in (11.96 m)	2 ft 3 in (0.69 m)
7 ft 5 in (2.27 m)	29% / 16.3°	42 ft 11 in (13.08 m)	2 ft 6 in (0.76 m)
8 ft 10 in (2.69 m)	33% / 18.2°	46 ft 8 in (14.22 m)	2 ft 9 in (0.84 m)
10 ft 5 in (3.18 m)	36% / 20.0°	50 ft 3 in (15.32 m)	3 ft 0 in (0.91 m)

IMPORTANT: Numbers in table based on **123’ (37.5 m) minimum bend radius**, beacon housing, EZ-Connect, connector, transition sub, and 1/3 of first drill pipe (L, totaling 8’ 8” [2.6 m]) in the ground before steering.

JT25 Power Pipe® Forged

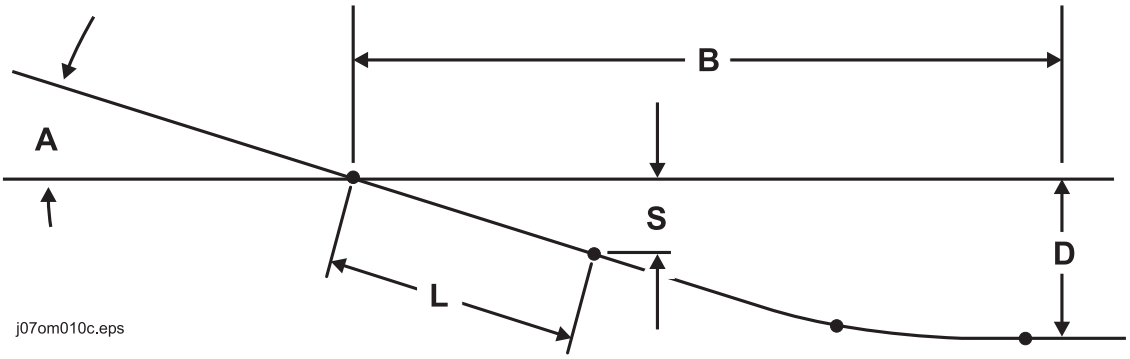

Minimum depth (D)	Entry pitch (A)	Setback (B)	Depth to begin steering (S)
1 ft 5 in (0.43 m)	16% / 9.0°	25 ft 6 in (7.8 m)	2 ft 9 in (0.84 m)
1 ft 8 in (0.51 m)	19% / 10.8°	28 ft 9 in (8.8 m)	3 ft 7 in (1.09 m)
1 ft 11 in (0.58 m)	22% / 12.4°	31 ft 9 in (9.7 m)	4 ft 5 in (1.35 m)
2 ft 2 in (0.66 m)	25% / 14.1°	34 ft 9 in (10.6 m)	5 ft 5 in (1.65 m)
2 ft 5 in (0.74 m)	29% / 16.2°	38 ft 6 in (11.7 m)	6 ft 9 in (2.06 m)
2 ft 9 in (0.84 m)	33% / 18.3°	42 ft 2 in (12.9 m)	8 ft 2 in (2.49 m)
3 ft 0 in (0.91 m)	36% / 20.0°	45 ft 2 in (13.8 m)	9 ft 6 in (2.89 m)

IMPORTANT: Numbers in table based on **108.2’ (32.97 m) minimum bend radius**, beacon housing, EZ-Connect, connector, transition sub, and 1/3 of first drill pipe (L, totaling 8’ 9” [2.7 m]) in the ground before steering.

Prepare Jobsite

⚠WARNING Jobsite hazards could cause death or serious injury. Use correct equipment and work methods. Use and maintain proper safety equipment. 274-050; 274-724 (2P)

To help avoid injury:

- Classify jobsite as electric if jobsite classification is in question or if the possibility of unmarked electric utilities exists.
- Expose lines by hand before digging. Cutting high voltage cable can cause electrocution.
- Remove all vegetation near operator's station. Contact with trees, shrubs, or weeds during electrical strike could result in electrocution.

Mark Bore Path

Mark your planned bore path and all located utility lines with flags or paint.

Prepare Entry Point

For bore to be successful, first pipe must be straight as it enters the ground. "Align the Joints" on page 142.

To help ensure that the first pipe does not bend, dig a small starting hole so that the first pipe is drilled into a vertical surface. Steer down as required at start. Drill head will tend to move in easiest direction (toward surface) when rotated near the surface.

To prevent bending or straining pipe, position drilling unit for straight entry.

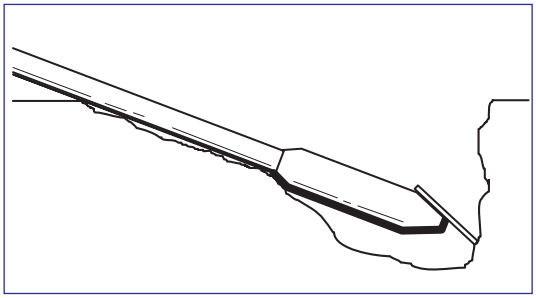

j07om011c.eps

Check Supplies and Prepare Equipment

Check Supplies

- receiver/transmitter or tracker with spare batteries
- extra batteries for DrillLok™ remote, if equipped
- beacons with new and spare batteries
- two-way radios with new and spare batteries
- quick wrench (see page 139)
- transition sub
- anchoring equipment and accessories
- bits, screens, nozzles (see page 134)
- adapters, pipe, beacon housings
- marking flags or paint
- water and additional hoses
- fuel
- drilling fluid additives (see page 132)
- spare fuses
- keys
- backreamers, swivels, pulling devices (see page 136)
- wash down hose and spray gun
- duct tape
- spray lubricant
- tool joint compound (see page 175)
- electrically insulating boots and gloves
- personal protective equipment, such as hard hat and safety glasses
- notepad and pencil

Prepare Equipment

Fluid Levels

- fuel
- hydraulic fluid
- engine coolant
- battery charge
- engine oil

Condition and Function

- filters (air, oil, hydraulic)
- fluid pump
- couplers
- tires and tracks
- pumps and motors
- drilling fluid mixer
- hoses and valves
- water tanks

Assemble Accessories

Fire Extinguisher

If required, mount a fire extinguisher near the power unit but away from possible points of ignition. The fire extinguisher should always be classified for both oil and electric fires. It should meet legal and regulatory requirements.

Drive

Chapter Contents

Start Unit 88

Steer Unit 88

Shut Down Unit 89

Start Unit

1. Insert key.
2. Turn key clockwise. See page 23 for more information.
3. Run engine at low throttle for 5 minutes.

Steer Unit

To steer drilling unit while using tethered ground drive controller, follow instructions for type of steering desired.

To steer while moving forward, push forward and move to left or right. Drilling unit will turn to left or right.

To steer while moving backward, pull back and move to left or right. Drilling unit will turn to left or right.

For tight steering in low speed, move control to left or right limit, then forward or backward as needed. Tracks will counter-rotate and turn drilling unit in a tight circle.

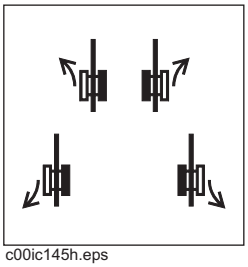
c00ic145h.eps

Tips to Reduce Track Wear

Rubber tracks are best suited at soil-based job sites with minimal rock and debris. Sharp objects such as gravel, steel shards, and broken concrete will damage rubber tracks and undercarriage components. Excessive operation on concrete or asphalt will shorten track life. When storing your machine, keep tracks away from rain and direct sunlight.

Wash tracks daily to remove foreign objects and abrasive soil from sprockets and idler rollers. Drive slowly and make wide turns when possible. Regularly check undercarriage components (sprocket, rollers, idler) for wear and damage. Maintain proper track tension. (See "Check Track Tension and Condition" on page 179.)

To prevent premature wear, avoid the following:

- Spinning tracks under heavy load.
- Turning on sharp objects such as stones, stumps and debris.
- Quick turns or "spin" turns on asphalt or concrete.
- Driving over curbs, ledges, and sharp objects.
- Driving with track edges pressed against hard walls, curbs or other objects.
- Driving on slopes.
- Operating on corrosive materials such as salt or fertilizer. Wash immediately.

Shut Down Unit

1. Stop track movement.
2. Lower drill frame and stabilizers to the ground.
3. Run engine at low throttle for 3 minutes to cool.
4. Turn ignition switch to STOP.
5. Remove key.

Transport

Chapter Contents

Lift 92

Load 92

- Tie Down 93
- Unload 94

Tow 94

Lift

This machine is not configured for lifting. If the machine must be lifted, load machine into a container or onto a platform appropriate for lifting. See "Specifications" for weight of machine.

Pipe Box Lifting Procedure

Pipe Box lifting points are identified by lifting decals. Lifting at other points is unsafe and can damage machinery.

See "Remove/Install Pipe Box" on page 144.

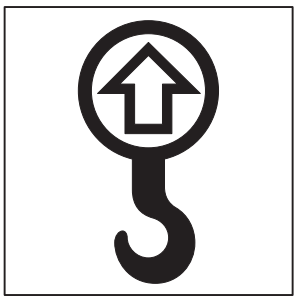

ic1319a.eps

Load

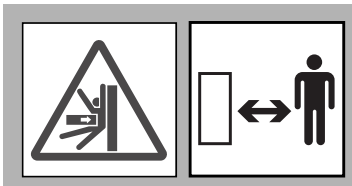

WARNING Crushing weight could cause death or serious injury. Use proper procedures and equipment or stay away.

To help avoid injury:

- Attach trailer to tow vehicle before loading or unloading.
- Load and unload trailer on level ground.
- Block trailer wheels.
- Prevent trailer sway by loading ten to fifteen percent of total vehicle weight (equipment plus trailer) on tongue.

1. Start drilling unit engine.
2. Using tethered ground drive controller, pull drive mode switch into low position. See page 25.
3. Move drilling unit to rear of trailer and align with ramps.
4. Slowly drive unit onto trailer.
5. Lower stabilizers to trailer floor.
6. Lower drill frame to trailer floor.
7. Stop engine when unit is safely positioned on trailer bed for proper tongue weight.
8. Attach tiedowns to drilling unit where indicated on page 93.
9. Ensure that all covers are properly secured.

Tie Down

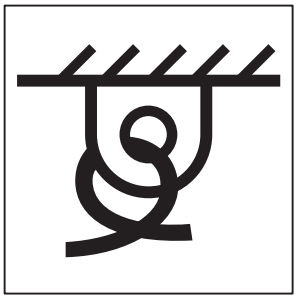
ic1320a.eps

Points

Tiedown points are identified by tiedown decals. Securing to trailer at other points can damage machinery.

Procedure

NOTICE:

- Wrenches can open after engine shutdown. Ensure that any downhole tool or pipe in wrenches is attached to spindle or removed before transport.
- Use Grade 7-3/8" (18.7 cm) transport chain to secure drilling unit.

Loop a transport chain around each tie down point. See chart below for correct distances between tiedown ends. Make sure tiedowns are tight before transporting.

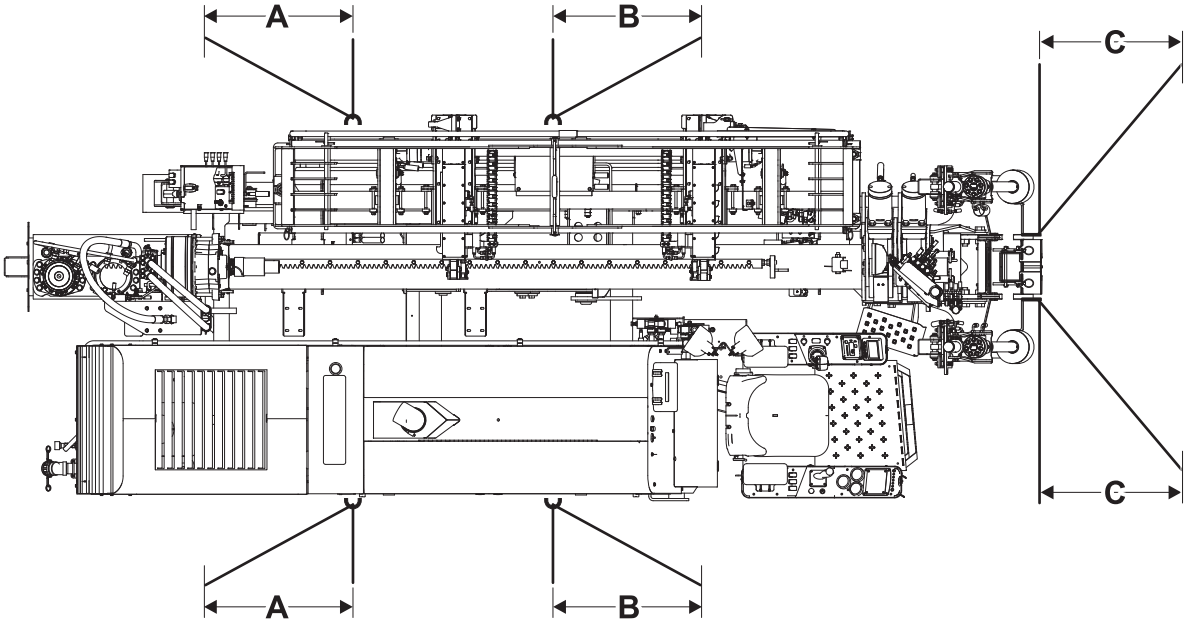

Distance	U.S.	Metric
A	12-45"	31-114 cm
B	12-45"	31-114 cm
C	less than 55"	less than 140 cm

Unload

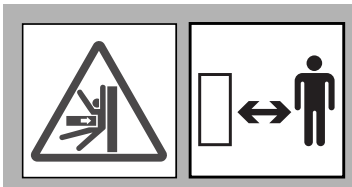

WARNING Crushing weight could cause death or serious injury. Use proper procedures and equipment or stay away.

To help avoid injury:

- Attach trailer to vehicle before loading or unloading.
- Load and unload trailer on level ground.
- Ensure trailer wheels are blocked.

1. Lower ramps.
2. Remove tiedowns.
3. Start drilling unit engine.
4. Using tethered ground drive controller, pull power mode switch into low position. See page 25.
5. Raise stabilizers.
6. Raise drill frame.
7. Slowly back unit down trailer or ramps.

Tow

Under normal conditions, drilling unit should not be towed. If towing is necessary:

- tow for short distances at less than 1 mph (1.6 km/h),
- attach chains to indicated tow points facing towing vehicle (shown),
- use maximum towing force of 1.5 times unit weight,
- disengage track planetaries.

If **front** tow points are facing towing vehicle, loop chain (1) through tow point and pull straight forward. If **back** tow points are facing towing vehicle, loop chain (2) through each tow point and bring them together to a central pull point.

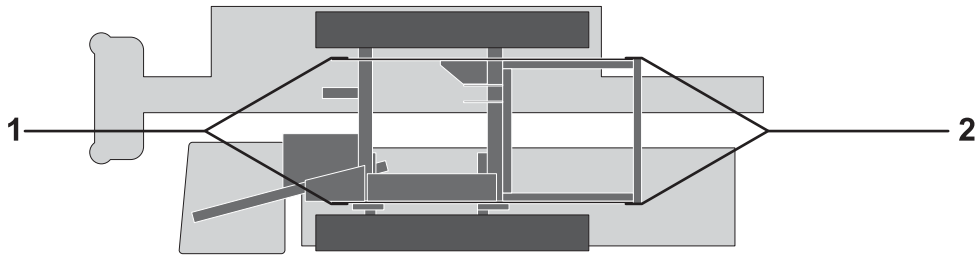

j37om063h.eps

To disengage track planetaries, reverse small cover plate in center of planetary on each track drive.

IMPORTANT: When planetaries are disengaged, unit has no brakes.

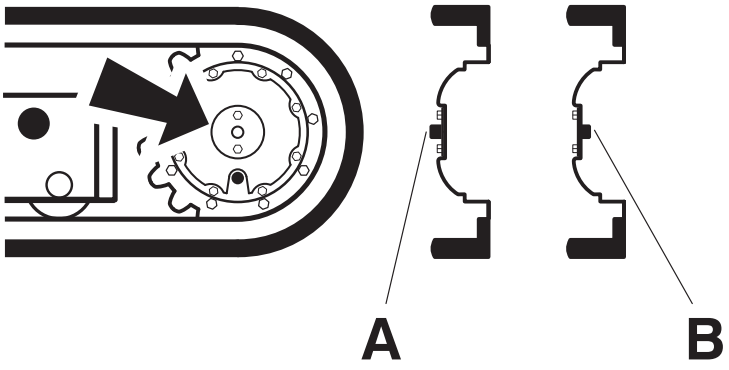

j07om041c.eps

A. Normal operation B. Towing

Conduct a Bore

Chapter Contents

Position Equipment 99

Connect Fluid System 99

Start System 100

Prime Drilling Fluid Pump 100

Operate Carriage Control 101

Clamp Pipe 102

Assemble Drill String 103

- Prepare Beacon Housing 103
- Attach Transition Sub 103
- Attach Beacon Housing. 104
- Connect Drill Pipe 104

Drill First Pipe 105

Enable Automated Pipeloader System 105

Add Pipe 106

Correct Direction 108

- Basic Rules 108
- Procedure 109
- Drill Head Position 109

Use Carve Mode 110

Record Bore Path 112

Surface Drill Head 113

Backream. 114

Remove Pipe 116

Remove Pullback Device 118

Position Equipment

1. Review bore plan and select drilling unit position and fluid unit position. See "Select Start and End Points" on page 73.
2. Move equipment into selected positions.

Connect Fluid System

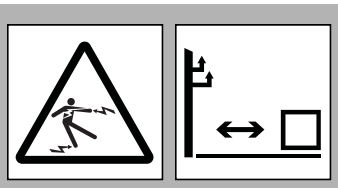

DANGER Electric shock will cause death or serious injury. Stay away. 274-049

To help avoid injury: Do not connect drilling unit to a public or private (business or home) water supply. If an electrical strike occurs while drilling unit is connected to a fluid system, the fluid system will also become electrified.

1. Connect fluid hose from mixing system to drilling fluid pump. A 2.0" (50.8 mm) or larger, non-collapsible hose is required.
2. Install y-strainer between mixing unit and drilling fluid pump. Position strainer so that drilling fluid flows in the direction of the arrow. In most cases, positioning strainer at outlet of mixing unit gives best results.

IMPORTANT: Clean y-strainer regularly. See page 184.

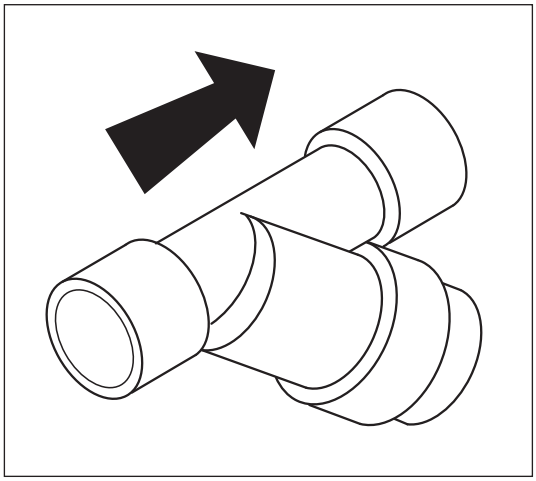

j07om057c.eps

Start System

1. Start drilling unit and remote fluid unit. Allow both engines to warm up.

IMPORTANT: Ensure that mixture of drilling fluid matches drilling conditions. See "Drilling Fluid" on page 129.

2. Enable DrillLok™/tracker control mode if desired. See "DrillLok™/Tracker Control" on page 133.
3. Press top of drilling unit throttle switch. Engine will increase to full throttle. If you do not want to use autothrottle mode (traditional controls only), return switch to center position.

Prime Drilling Fluid Pump

WARNING Read operator's manual. Know how to use all controls. Your safety is at stake. 273-475.

To help avoid injury: Prime the drilling fluid pump before use to reduce flow fluctuations, which make it difficult to control the washwand.

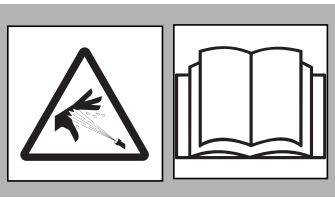

WARNING Pressurized fluid or air could pierce skin and cause severe injury. Refer to operator's manual for proper use. 270-6035.

Prime drilling fluid pump each time tank is changed. To prime the pump:

1. Fill drilling fluid hose and connect hose to unit.
2. Operate mixing/transfer pump at full speed for 1 - 3 minutes to discharge air from system.
3. Return mixing/transfer pump to normal operating speed and continue the bore.
4. If drilling fluid pressure surges are observed, repeat step 2.

Operate Carriage Control

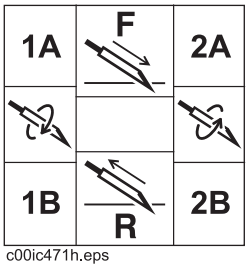

c00ic471h.eps

Drilling (Traditional Controls)

During normal drilling operation, the thrust/rotation joystick controls both operations and allows any combination of the two based on the position of the joystick:

- Push joystick toward 1A for forward thrust with clockwise rotation.

NOTICE: Counterclockwise rotation can unthread pipe in the ground.

- Push joystick toward 2A for forward thrust with counterclockwise rotation.
- Pull joystick toward 2B for reverse thrust, with counterclockwise rotation.
- Pull joystick toward 1B reverse thrust, with clockwise rotation.

Drilling (Alternate Controls)

Refer to decals for functions. See page 34, and page 45

Coordinated Make-up

During pipe change operations when front wrench is closed and carriage is on front or rear home, the thrust/rotation joystick only controls the speed and direction of rotation. The machine controller manages thrust and matches the speed and direction of rotation to smoothly thread or unthread pipe sections.

Engage clockwise rotation (machine controlled makeup).

Engage counterclockwise rotation (machine controlled breakout).

IMPORTANT:

- If the rotation control is moved straight forward or backward so there is no rotation, thrust is controlled by the operator.
- While rotating the operator can adjust thrust speed slightly with thrust control.

Clamp Pipe

DANGER Turning shaft will kill you or crush arm or leg. Stay away.

To help avoid injury: Only clamp pipe at reinforced end. Clamping anywhere else on the pipe will weaken the pipe. Pipe can later break, even when operating under normal loads.

NOTICE: Ensure that any downhole tool or pipe in tool joint vises is attached to spindle or removed before transport. Wrenches can open after engine shutdown.

Clamp on pipe when joint is between wrenches (1 and 2). Always clamp on the larger diameter areas on either side of the tool joint face.

NOTICE: Clamping pipes on top of female end threads can damage threads. Only clamp female pipe ends behind the threads.

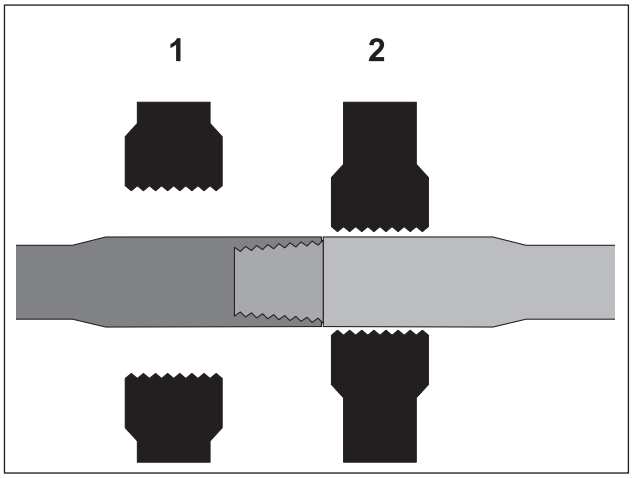

DrillPipe_Clamp.eps

Assemble Drill String

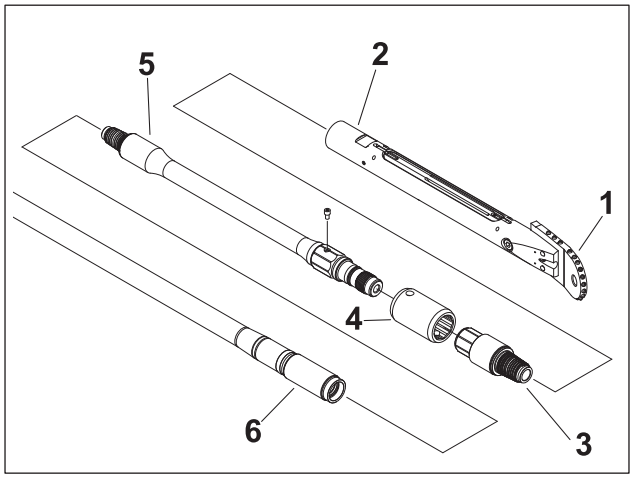

EZ_Connects.eps

1. bit
2. beacon housing
3. adapter
4. collar
5. transition sub
6. JT25 drill pipe

Prepare Beacon Housing

1. Select nozzles and bit.

IMPORTANT: A variety of nozzles and bits are available to suit your particular job conditions. See page 143 for more information, or contact your Ditch Witch® dealer.

2. Insert nozzle into beacon housing.
3. Attach bit to beacon housing.
4. Install beacon, following beacon instructions for:
   - battery replacement
   - beacon positioning.
5. Install beacon housing lid.
6. Follow beacon instructions to check beacon operation.
7. Follow tracker instructions to calibrate beacon.

Attach Transition Sub

1. Remove blocks from pipe guides.
2. Pull transition sub into front wrench.
3. Close wrench.
4. Lube joints.
5. Use machine torque to tighten joint fully.

Attach Beacon Housing

Use machine torque to attach beacon housing.

1. Pull beacon housing into front wrench.
2. Close wrench.
3. Use machine torque to tighten joint fully.

Connect Drill Pipe

1. Start drilling unit engine.
2. Align drill pipe in front wrench.
3. Clamp tool joint in front wrench. See "Clamp Pipe" on page 102.
4. Disconnect from pipe:
   - Rotate spindle counterclockwise until threads on pipe segments are disengaged from each other. Carriage will move backward as pipe rotates counterclockwise.
   - Stop rotation and move carriage backward until it stops on the rear stop switch.
5. Load pipe:
   - Make sure pipe box is positioned correctly.
   - Open grippers or make sure they are open.
   - Grippers open as pipe is lowered.
   - Close grippers around pipe.
   - Lubricate pipe threads at front wrench.
   - Move pipe to spindle.
   - Raise pipe lifters.
6. Connect pipe:
   - Move carriage forward until spindle meets back end of pipe joint. Rotate spindle clockwise until pipe begins to spin. Relax grippers slightly.
   - Move carriage forward until pipe joints meet at front wrench.
   - Rotate spindle clockwise. Carriage will move forward as pipe threads tighten.
   - Rotate clockwise until spindle stops turning, and joint is fully tightened.
   - Open grippers.
   - Retract shuttles fully.
   - Open front wrench.

Drill First Pipe

DANGER Turning shaft can kill you or crush arm or leg. Stay away.

To help avoid injury:

- Keep everyone at least 10' (3 m) away from turning drill string.
- Push pipe slowly. Forcing can bend string. Do not use bent pipe.

WARNING Jobsite hazards could cause death or serious injury. Use correct equipment and work methods. Use and maintain proper safety equipment. 274-050; 274-724 (2P)

1. Turn on drilling fluid.
2. Visually check for drilling fluid flow.
3. Turn drill bit to starting position.
4. Slowly move carriage forward. Drill first pipe as straight as possible.
5. Monitor gauges.

Enable Automated Pipeloader System

Add Pipe	Remove Pipe
1. Open front wrench and retract shuttles for add pipe function to work.	1. Open front wrench and retract shuttles for remove pipe function to work.
2. Press top of add pipe/manual/remove pipe switch. Green control cycle light will come on.	2. Press bottom of add pipe/manual/remove pipe switch. Green control cycle light will come on.
3. Grippers will open, pipe will be lowered, and then green control cycle light will flash.	3. Grippers will open, pipe will be lowered and lifted off shuttles, and then green control cycle light will flash.

IMPORTANT: If you leave the seat during an add or remove pipe cycle, turn automated pipeloader system off (switch to manual control) and then back to add pipe or remove pipe. If you leave the seat between add or remove pipe cycles, re-enabling system is not needed.

Add Pipe

1. Press top of drilling unit throttle switch until engine is at full throttle.
2. Enable automated pipeloader system (automated pipeloader control only). See "Enable Automated Pipeloader System" on page 105.
3. Break joint at SaverLok® body.

Manual Pipeloader Controls	Automated Pipeloader Control
• Clamp pipe joint. See "Clamp Pipe" on page 102. • Locate drill head. • Engage front wrench until pipe is clamped and pressure develops. • Slowly move carriage back until movement stops. • Slowly rotate spindle counterclockwise. Carriage will move back as threads separate. • After threads are fully separated, stop rotation and move carriage to back of frame.	• Clamp pipe joint. See "Clamp Pipe" on page 102. • Locate drill head. • Engage front wrench until pipe is clamped and pressure develops. • Slowly move carriage back until movement stops. • Slowly rotate spindle counterclockwise. Carriage will move back as threads separate. • After threads are fully separated, stop rotation and move carriage to back of frame. • While carriage is moving, green control cycle light will come on. Grippers will grip, pipe will be lubed, and then green control cycle light will flash.

4. Load pipe.

Manual Pipeloader Controls	Automated Pipeloader Control
• Make sure shuttle stop is properly positioned on pipeloader and lift arms are completely lowered. • Close grippers. • Lube upper pipe threads. • Move pipe to spindle and lube lower threads. • Raise pipe in box.	• Make sure shuttle stop is properly positioned on pipeloader. • When carriage is moved to back of drill frame, press RESUME. Green control cycle light will come on. • Pipe will be moved to spindle, front threads will be lubed, pipe in box will be lifted, and then green control cycle light will flash.

5. Connect pipe to SaverLok® body.

Manual Pipeloader Controls	Automated Pipeloader Control
IMPORTANT: Always rotate clockwise unless breaking pipe joint. Rotating counterclockwise will separate joints. • Move carriage forward until SaverLok body meets pipe. • Continue to slowly advance carriage and rotate spindle until pipe threads tighten. • Relax grippers.	**IMPORTANT:** Always rotate clockwise unless breaking pipe joint. Rotating counterclockwise will separate joints. • Move carriage forward until SaverLok body meets pipe. • Continue to slowly advance carriage and rotate spindle until pipe threads tighten. • Press RESUME. Green control cycle light will come on. • Grippers will relax and then green control cycle light will flash.

6. Connect new pipe.

Manual Pipeloader Controls	Automated Pipeloader Control
• Slowly move carriage forward and rotate spindle until pipe threads tighten. • To fully torque joint, slowly rotate pipe until spindle stops turning. • Open wrench. • Open grippers fully. • Retract shuttles against shuttle stop. • Lower pipe lifters.	• Slowly move carriage forward and rotate spindle until pipe threads tighten. • To fully torque joint, slowly rotate pipe until spindle stops turning. • Open wrench. • Press RESUME. Green control cycle light will come on. • Grippers will open, shuttles will retract, pipe lifters will lower, and then green control cycle light will flash.

7. Press and hold quick fill fluid pump switch until pipe fills and fluid pressure begins to rise.
8. Rotate spindle.
9. Slowly move carriage forward. Adjust rotation speed control according to bit size and soil conditions.
10. Engage and set cruise control as desired. See "Cruise Control" on page 150.
11. Monitor gauges.
12. Locate drill head with tracker at least every half-length of pipe.

Correct Direction

Correcting direction is a skill operators gain with experience and knowledge of equipment and soil conditions. These instructions cover only basic procedures. For information about specific equipment or jobsites, contact your Ditch Witch® dealer.

To track progress and make corrections, one crew member tracks the drill head and sends instructions to the operator. Corrections are made by tracking the drill head, comparing current position to bore plan, and steering drill head as needed.

Basic Rules

General

- Steering ability depends on soil condition; bit, drill head, and nozzle used; roll of drill head; and distance pushed without outer rotation.
- All corrections should be made as gradually as possible. See "Recommended Bend Limits" on page 77.
- Over correcting will cause "snaking." This can damage pipe and will make drilling and pullback more difficult. Begin to straighten out of each correction as early as possible.
- Do not push an entire piece of drill pipe into ground without rotation. This can exceed bend radius and cause pipe failure.

Procedure

1. Locate drill head. Take readings available with your beacon and tracking equipment such as:
   - depth
   - pitch
   - left/right information
   - temperature
   - beacon roll
2. Compare position to bore plan. Determine direction drilling should go.
3. Position drill head.
4. Drill in pipe.

Drill Head Position

The drill head position is determined by reading beacon roll. Roll is displayed as a clock face position.

1. Read beacon roll.
2. Slowly rotate pipe until tracker displays desired beacon roll.

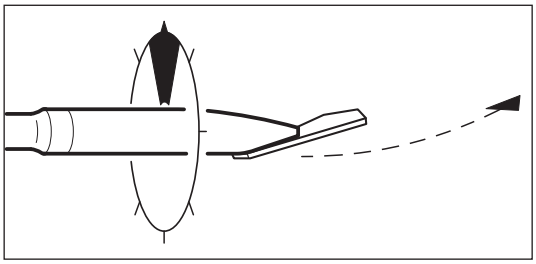
j07om048c.eps

To change direction:

1. Rotate pipe to clock position you intend to travel.
2. Push pipe into ground.

To move forward without changing direction:

1. Rotate pipe.
2. Push pipe into ground.

Use AutoCarve

AutoCarve helps the operator change direction when thrust stalls in difficult soil conditions. AutoCarve rotates the bit clockwise and counterclockwise to grind away soil, clearing a path to improve steering through tough formations.

Movement	Description
alternating clockwise and counterclockwise rotation	Enables the downhole tool to carve tough soil formations. Rotation speed can be adjusted during autocarving. ***NOTICE:*** To reduce the chance of unthreading pipe sections downhole, rotation pressure is limited during counterclockwise rotation; however, the operator should monitor carve operation and adjust thrust and rotation to prevent unthreading.
carve window	The range of alternating rotation.
thrust	In autocarve mode, initial thrust speed is very slow or fully stopped. Adjust speed anytime during carving.
pullback	Thrust and rotation operate normally when thrust is pulled rearward. High-speed pullback is not available in autocarve mode.

Operation

IMPORTANT:

- 2-speed thrust is not allowed in AutoCarve mode.
- AutoCarve mode is disabled while front wrench is closed.
- Adding or removing pipe does not affect AutoCarve position.

1. **Position downhole tool for carving.** Rotate the toolhead to the desired position.
2. **Turn on AutoCarve mode.** Press top of AutoCarve switch.
3. **Begin carving.** Move thrust control to full forward and then release to neutral to start alternating rotation. Adjust thrust and rotation speed as needed during carving.
4. **Adjust thrust speed.** Press and hold the Resume switch until carriage begins to move forward, then release switch. Press Resume repeatedly to increase thrust speed to desired setting. To reduce thrust speed, press Set switch.
5. **Set carve window.** Use the Carve Window Potentiometer to set the desired range of travel. Adjust as needed while carving.
6. **Adjust rotation speed**. Move rotation control to full clockwise rotation. Press the Set/Resume switch to decrease/increase rotation speed. Adjust as needed while carving.

   IMPORTANT: For finer adjustment, press the multi-use button while adjusting thrust or rotation. Be aware, however, this also activates the reaming function and will change steering direction unless the tool is stopped at the original position before releasing multi-use button.

7. **Pause carving.** Move thrust control back from neutral.
8. **Resume carving.** Move thrust control to full forward and then release to neutral to start alternating rotation.
9. **Ream a newly carved section.** After carving a few inches, press and hold the 2-Speed button and m**o**ve rotation control to full clockwise rotation for maximum rotation. When tool rotates freely, reduce rotation speed and stop at desired carve position. Release 2-Speed button and resume carving.

   IMPORTANT: If full rotation seems restricted and insufficient to ream the hole, move carriage back slightly until full rotation is possible, then move carriage forward while rotating.

10. **Exit carve mode.** Press bottom of AutoCarve switch. Carriage movement and rotation will stop. Continue normal drilling.

    Note: For quicker setup during a long bore, autocarve thrust and rotation settings are retained until the unit is shut down.

Record Bore Path

Locate drill head every half-length of pipe. As the job is completed, record the actual data for each drill pipe. List pitch and depth of each joint and a brief description of the procedure. In addition, draw a simple sketch of the site and record depth and rough location of pullback.

Ditch Witch® bore tracking software is also available for plotting and tracking your bore path. It utilizes a Ditch Witch tracking system, including a tracker, display and tracking beacon, and special software. The display can store jobs in its memory or the system can be run in the field using a laptop computer. See your Ditch Witch dealer for details.

Surface Drill Head

DANGER Moving tools will kill or injure. Never use pipe wrenches on drill string. 273-278

DANGER Turning shaft will kill you or crush arm or leg. Stay away.

To help avoid injury:

- Tracker operator and drill operator should maintain two-way communication.
- Keep everyone clear of the exposed drill string.
- No one should enter pit until clear communication is given by the drill operator that the drill unit is shut down. If using DrillLok™/tracker control (See "DrillLok™/Tracker Control" on page 133.), do not enter pit until tracker is turned off and green light on drill unit is lit.
- Drill operator should be instructed to discontinue drill string rotation as soon as drill bit exits the bore. Use thrust only to extend drill string beyond exit hole.

1. Guide drill head to target pit or up through surface. Make all bends gradual. See "Recommended Bend Limits" on page 77.
2. Clean area around exit point
3. Turn fluid flow control to off position as soon as drill head emerges.
4. Allow tracker operator to turn off tracker or use DrillLok™ to disable drilling unit thrust/pullback and rotation hydraulics. Tracker operator waits at least 16 seconds for green light to enter pit and change tools.
5. Clean drill head especially around threads.
6. Disconnect EZ-Connect joint or use quick wrench to remove drill head. Keep threads clean. See "Quick Wrench" on page 139.

Backream

Sometimes it is necessary to drill a pilot hole first, then enlarge the hole to accommodate larger product. As a general rule, the final hole should be 1.5 times larger than the diameter of the product being installed. The number of passes needed depends on soil conditions. Do not try to increase hole size too much in one pass. Several passes using successively larger reamers will save wear on machine.

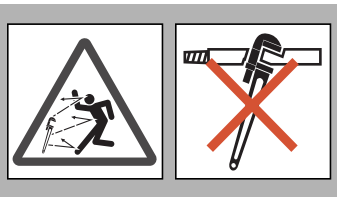

DANGER Moving tools will kill or injure. Never use pipe wrenches on drill string. 273-278

WARNING Jobsite hazards could cause death or serious injury. Use correct equipment and work methods. Use and maintain proper safety equipment. 274-050; 274-724 (2P)

To help avoid injury: Continue to use strike system during backreaming.

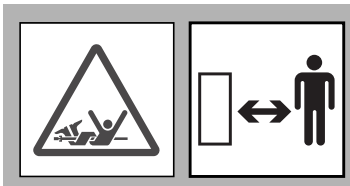

DANGER Turning shaft will kill you or crush arm or leg. Stay away.

To help avoid injury:

- Maintain two-way communication with tracker operator.
- Begin backream only when tracker operator has communicated that everyone is clear of the exposed backream string.
- Do not allow anyone to stand to the side of the exposed drill string. Drill string and backreamer can move sideways suddenly if rotated while away from the exit hole.

Assemble Backream String

1. Select backreaming devices. See "Backreamers" on page 136.
2. Determine fluid rate requirements and install appropriate nozzles to provide sufficient flow. See "Backream Fluid Requirements" on page 137 and "Nozzles" on page 134.
3. Attach backreamer to beacon housing if tracking backream.
4. Install beacon, following beacon instructions for:
   - battery replacement
   - beacon positioning
5. Install beacon housing lid. See page 135.
6. Follow beacon instructions to check beacon operation.
7. Follow tracker instructions to calibrate beacon.
8. Use quick wrenches to attach transition sub to drill pipe string.
9. Use quick wrenches to attach backreamer/beacon housing assembly to transition sub.
10. Attach additional pullback devices or product to end of backreamer/beacon housing assembly.

Begin Backream

1. After backream assembly is attached to pipe, tracker operator should:
   - Leave pit and stand away from the exposed drill string.
   - If using DrillLok™/tracker control, turn on tracker to enable drilling unit thrust/pullback and rotation.
   - If not using DrillLok/tracker control, communicate to drill operator that backream string is clear.
2. Turn on drill fluid and pressurize drill pipe. Verify that jets are open.
3. Without rotating, slowly pull back until reamer contacts bore hole opening. Do not lodge reamer in hole.
4. Begin slow rotation and pullback.
5. Increase drilling fluid flow and rotation as the backream string enters the ground.
6. If tracking backream, tracker operator may continue tracking when the backream string is no longer visible.

Remove Pipe

1. Enable automated pipeloader system (automated pipeloader control only). See "Enable Automated Pipeloader System" on page 105.
2. Stop carriage when alignment pin becomes visible behind rear wrench.
3. Clamp pipes. See "Clamp Pipe" on page 102.
4. Break front joint:
   - Turn rear wrench counterclockwise to break joint.
   - Disengage rear wrench and rotate wrench clockwise.
5. Grip pipe:

Manual Pipeloader Controls	Automated Pipeloader Control
• Open grippers. • Lift pipe off shuttles. • Extend shuttles to spindle position. • Close grippers. Leave grippers loose enough to allow pipe to rotate. • Lower lifters.	• Press RESUME. Green control cycle light will come on. • Shuttles will extend, grippers will grip fully and relax open, pipe lifters will lower, and then green control cycle light will flash.

6. Separate front joint:
   - Slowly rotate spindle counterclockwise and move carriage back to separate pipe.
   - Continue to move carriage back until pipe is properly positioned in rear wrench.

7. Break rear joint:

Manual Pipeloader Controls	Automated Pipeloader Control
• Engage rear wrench. • Slowly rotate spindle counterclockwise and move carriage back until joint is loosened. **Do not** fully separate joint. • Disengage rear wrench. • Move carriage back until front end of pipe is aligned with front end of pipe box or alignment pin is even with tab on frame. • Close grippers. • Rotate spindle counterclockwise and move carriage back until SaverLok® body is separated from pipe. • Move carriage to back of frame.	• Engage rear wrench. • Slowly rotate spindle counterclockwise and move carriage back until joint is loosened. **Do not** fully separate joint. • Disengage rear wrench. • Move carriage back until front end of pipe is aligned with front end of pipe box or alignment pin is even with tab on frame. • Press RESUME. Green control cycle light will come on. • Grippers will close and then green control cycle light will flash. • Rotate spindle counterclockwise and move carriage back until SaverLok body is separated from pipe. • Move carriage to back of frame.

8. Ensure shuttle stop is positioned correctly.
9. Load pipe into pipe box:

Manual Pipeloader Controls	Automated Pipeloader Control
• Move shuttle under pipe box to shuttle stop. • Release grippers and raise lift arms to place pipe in box. • Lube front threads.	• Press RESUME. Green control cycle light will come on. • Shuttles will retract under edge of pipe box and then green control cycle light will flash. • Move carriage forward until it clears end of pipe box. Green control cycle light will come on. • Shuttles will retract to shuttle stop, front threads will be lubed, grippers will release pipe, pipe lifters will raise until pipe is off shuttles, and then green control cycle light will flash.

10. Attach SaverLok body to next pipe:
    - Move carriage forward until SaverLok body touches pipe.
    - Rotate spindle and move carriage forward just enough to allow SaverLok body to connect to pipe.
    - Slowly tighten joint to full machine torque.
11. Disengage front wrench to release pipe.

Remove Pullback Device

The pullback device can be removed when the last pipe is on the frame. It can also be removed when a target pit along the bore path has been reached. Remaining pipe is then pulled back and removed.

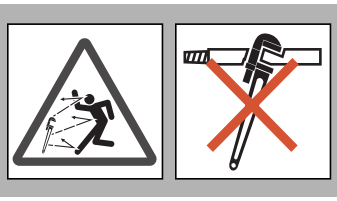

DANGER Moving tools will kill or injure. Never use pipe wrenches on drill string. 273-278

1. Press bottom of drilling unit throttle switch until engine is at low throttle.
2. Turn off drilling fluid.
3. Clean pullback device.
4. Turn drilling unit engine off.
5. Disconnect pullback material.
6. Use quick wrenches to remove pullback device.

Systems and Equipment

Chapter Contents

Anchor System 121

- Drive Anchors 122
- Remove Anchors 122

Electric Strike System 123

- FCC Statement 123
- Assemble Voltage Detector 124
- Test Strike System 124
- Troubleshoot Strike System 125
- Use Electric Strike Simulator 127

Drilling Fluid 129

- Guidelines 129
- Polymer 129
- Bentonite 130
- Mixtures 130
- Basic Fluid Recipes 131
- Drilling Fluid Requirements 132
- Funnel Viscosity 132

DrillLok™/Tracker Control 133

Downhole Tools 134

- Nozzles 134
- Bits 134
- Beacon Housings 135
- Backreamers 136
- Backream Fluid Requirements 137

Quick Wrench 139

Drill Pipe 141

- Perform Regular Drill Pipe Care 141
- Use Drill Pipe Correctly 142

Pipe Boxes 144

- Remove/Install Pipe Box 144
- Add/Remove Single Pipe 146

Cruise Control 150

- Engage 150
- Adjust Settings 151
- Override 151
- Disengage 151
- Resume 151

Diagnostic Codes 152

- Electronic Controlled Engine Overview. 152
- Reading Engine Diagnostic Codes 152
- Reading Machine Diagnostic Codes 159
- Code Severity Levels 159
- Machine Diagnostic Codes 161

Anchor System

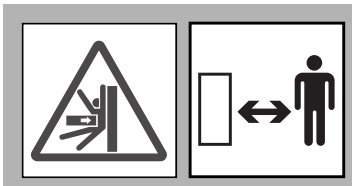

WARNING Crushing weight could cause death or serious injury. Use proper procedures and equipment or stay away.

To help avoid injury:

- Drive anchors properly before drilling.
- Stand on platform when operating anchor controls.
- Wear high-top protective boots with legs of pants completely tucked inside.
- Wear protective gloves.
- If you are not driving two anchors to full depth, drive optional ground rod into soil away from drilling unit and connect ground rod to drilling unit.

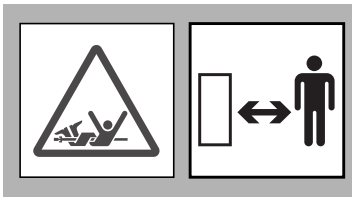

DANGER Turning shaft can kill you or crush arm or leg. Stay away.

To help avoid injury: Do not replace anchor collar bolt with one longer than original. Clothing could catch on turning shaft.

Drive Anchors

1. Press top of anchor enable switch.
2. Raise anchor shaft to top of anchor frame.

> ***NOTICE:*** Centering cap **MUST** be positioned in centering tube to prevent damage to anchor.

3. Use high speed rotation and low thrust speed to start driving anchor into ground.
4. Stop rotation and carefully position cap (1) into centering tube (2). Continue rotation and drive anchor into the ground.
5. Anchor is set when auger shaft flange (3) rests firmly on cap (1) and centering tube (2).
6. Repeat process for other anchor.
7. Leave anchors attached to anchor drivers.

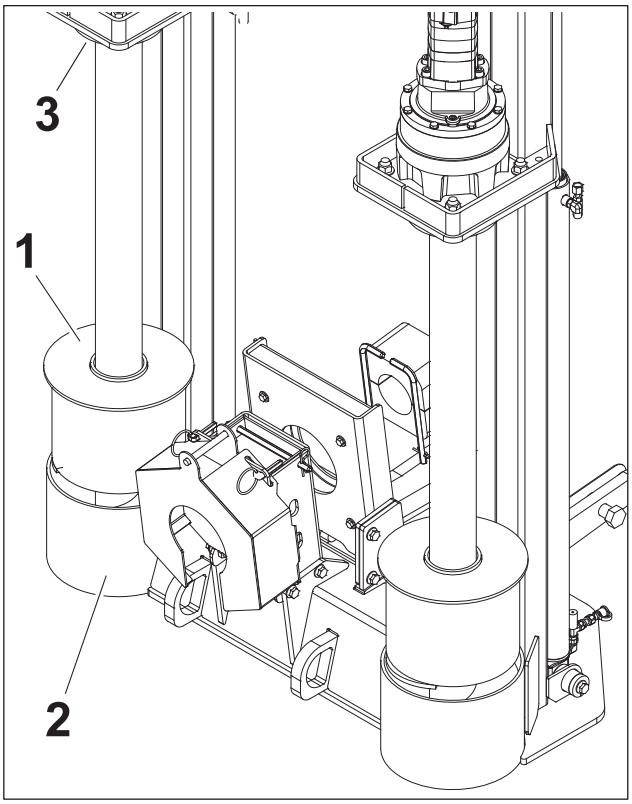

j22om014h.eps

Remove Anchors

1. Use anchor rotation and thrust controls to slowly remove anchor shaft from ground.
2. Repeat process for other anchor.

Electric Strike System

Any time you drill in an electric jobsite, electric strike system must be properly set up, tested, and used. You must wear protective boots and gloves meeting the following standards:

- Boots must have high tops and meet the electric hazard protection requirements of ASTM F2413 or ASTM F1117 when tested at 14,000 volts. Tuck legs of pants completely inside boots.
- Gloves must have 17,000 AC maximum use voltage, according to ASTM specification D120.

If working around higher voltage, use gloves and boots with appropriately higher ratings.

NOTICE: The strike system does not prevent electric strikes or detect strikes before they occur. **If alarms are activated, a strike has already occurred** and equipment is electrified.

Read and follow "Electric Jobsite Precautions" on page 75. Review safety procedures before each job.

FCC Statement

The Electric Strike System has been tested and found to comply with the limits for a Class A digital device, pursuant to Part 15 of the FCC rules. These limits are designed to provide reasonable protection against harmful interference when the equipment is operated in a commercial environment. This equipment generates, uses and can radiate radio frequency energy and, if not installed and used in accordance with the instructions, can cause harmful interference to radio communications. Operation of this equipment in a residential area could cause harmful interference which the user will be required to correct at his own expense.

Changes or modifications not expressly approved in writing by The Charles Machine Works, Inc. may void the user's authority to operate this equipment.

Assemble Voltage Detector

1. Drive voltage stake into ground at least 6' (2 m) away from any part of system.
2. Clip voltage limiter to voltage stake.

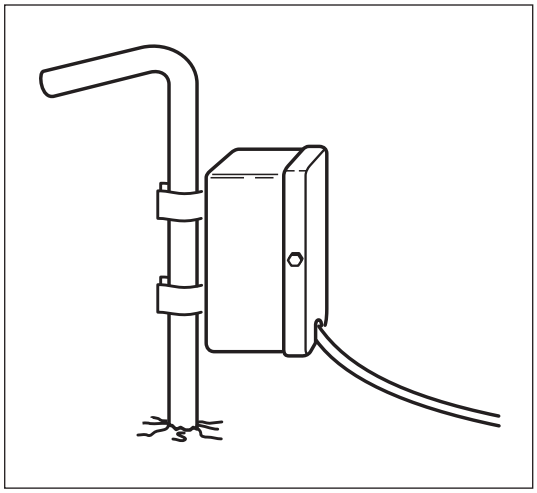

j07om021c.eps

Test Strike System

If system fails any part of this test, see "Troubleshoot Strike System" on the following page. Do not drill until test is completed successfully.

1. Turn on drilling unit.
2. ESID control module will perform internal tests which check everything but alarms and strobe.
3. If green OK indicator and electrical power supply indicator lights remain on, press self test button to perform total test of strike system. During this test:
   - All lights should glow.
   - Alphanumeric readout should display numbers.
   - Alarms and strobes on all connected units should sound.
4. If this test is successful, OK indicator and electrical power supply indicator lights will remain on.
5. Use Electric Strike Simulator to test voltage and current sensors. See page 127.

Troubleshoot Strike System

When strike system detects a problem, an error code will be displayed. Anytime this happens, press self test button to retest. If error code is still displayed and does not appear in this chart, have control module checked or replaced.

Other problem situations and their possible causes and solutions are listed in the chart below.

Problem	Possible cause	Possible solution
No lights or readings showing after drilling unit key has been on at least one minute	Problems in startup	Push self test button. If problem goes away, retest strike system
	No power to strike system control module	Check drilling unit electric system
		Check that harness from drilling unit to control module is connected
		Check that cable from drilling unit carries more than 10V
	Defective control module	Have control module checked or replaced
Screen is blank	Strike system is not getting adequate power from drilling unit	Check drilling unit electric system
		Check that harness from drilling unit to control module is connected
		Check that harness from drilling unit carries more than 10V
	Defective control module	Have control module checked or replaced
OK indicator is on, but electrical power supply indicator is off	Strike system is not getting adequate power from drilling unit	Check drilling unit electric system
		Check that harness from drilling unit to control module is connected
		Check that harness from drilling unit carries more than 10V
	Defective control module	Have control module checked or replaced
Electrical power supply indicator is on, but OK indicator is off	Problem detected during test	Check for error code and have control module checked or replaced
	Defective control module	Have control module checked or replaced

Problem	Possible cause	Possible solution
Strobe light on drilling unit does not work during total test	Improper connections with control module	Check connections and wiring harness
	Defective strobe light	1. Disconnect strobe and connect to external 12V power source. 2. If strobe does not work, replace it.
	Defective control module	Have control module checked or replaced
Alarm on drilling unit does not work during total test	Improper connections with control module	Check connections and wiring harness
	Defective alarm	1. Disconnect strobe and connect to external 12V power source. 2. If strobe does not work, replace it.
	Defective control module	Have control module checked or replaced
Strobe light and alarm on drilling unit do not work during total test	Improper connections with control module	Check connections and wiring harness
	Defective control module	Have control module checked or replaced
EC2 code displays and current problem indicator is on	Improper connections with control module	Check cable connections on control module and current transformer
	Defective current transformer	1. Disconnect current transformer. 2. Check for 20-40 ohms from pin 1 to pin 4, 20-40 ohms from pin 1 to pin 2, and less than 1 ohm from pin 2 to pin 4.
	Defective current transformer cable	1. Disconnect cable from transformer and control module. 2. Check continuity of cable. 3. If continuity is zero or cable is damaged, replace.
	Defective control module	Have control module checked or replaced
EV2 code displays and voltage problem indicator is on	Improper connections with control module	Check cable connection on control module
	Defective voltage limiter	Have voltage limiter checked or replaced
	Defective control module	Have control module checked or replaced

Use Electric Strike Simulator

Use the Electric Strike Simulator (p/n 259-506) to test voltage and current sensors on ESID. If readings are less than indicated here, replace 9V battery in simulator and retest.

Current Test

To test for current at normal levels:

1. Thread one lead wire through current transformer.
2. Clip ends of lead wires together to make one loop.
3. Move simulator switch to "current" and press test button.
4. Watch screen and lights above display on strike system.
   - Three or four lights should turn on.
   - Current "A" should show 30-50% in display.

To test for current at strike levels:

1. Put two or three loops through current transformer.
2. Follow steps above to test.
3. Display should show the following:
   - All lights should turn on.
   - Alarm and strobe should turn on.

   With two loops,
   - Current "A" should be 80-110%.
   - Strike indication might go on and off.

   With three loops,
   - Current should be 130-160%.
   - Strike indication should be continuous.

Voltage Test

1. Place voltage limiter on something insulated from ground and drilling unit (such as dry board or tire), but near frame of drilling unit.
2. Clip one lead to frame.
3. Clip other lead to one voltage limiter mount.
4. Move simulator switch to "voltage" and press test button.
5. Watch screen and lights above display on strike system.
    - All lights should turn on.
    - Alarm and strobe should turn on.
    - Voltage "V" should show 90-110%.

It is normal for simulator voltage levels to drift below strike level. When this happens, light in triangle should go off and alarm and strobe should stop working. If the level drifts above strike level again, light, alarm, and strobe should be turned on again.

Drilling Fluid

CAUTION Improper handling or use of chemicals may result in illness, injury, or equipment damage. Follow instructions on labels and in material safety data sheets (MSDS).

For productive drilling and equipment protection, use these recommended Baroid® products, available from your Ditch Witch® dealer.

- Soda ash
- Quik-Gel® dry powder bentonite (p/n 259-804)
- EZ- Mud® liquid polymer (p/n 259-805)
- Liqui-Trol™ liquid polymer suspension (p/n 259-808)
- Quik-Trol® dry powder polymer (p/n 259-809)
- Bore-Gel® drilling fluid (p/n 259-807)
- Con Det® water-soluble cleaning solution (p/n 259-810)

Guidelines

Match drilling fluid to soil type. This chart is meant as a guideline only. See your local Ditch Witch dealer for soil conditions and drilling fluid recommendations for your area.

Soil type	Drilling fluid recommendation
smooth, flowing sand	bentonite or Bore-Gel + medium chain polymer
coarse sand or light soil	bentonite or Bore-Gel
heavy clay	long chain polymer + Con Det
swelling clay	long chain polymer + Con Det
rock	Bore-Gel

Polymer

This drilling fluid additive provides excellent lubrication and increases viscosity in average soils and heavy clay. In swelling clay, polymer can reduce swelling that traps pipe in the bore.

There are two types of polymer:

- long chain such as Baroid EZ-Mud
- medium chain such as Baroid Quik-Trol

Bentonite

Bentonite is a dry powder. When properly mixed with water, it forms a thin cake on bore walls, lubricating the bore, keeping it open, and holding fluid in the bore.

Some things to remember when mixing bentonite:

- Use clean water free of salt, calcium, or excessive chlorine.
- Use water with pH level between 9 and 10.
- Use water with hardness of less than 120 ppm.
- Do not use bentonite containing sand.
- Mix bentonite thoroughly or it will settle in tank.
- Do not mix bentonite to a funnel viscosity of over 50.

For information on measuring funnel viscosity, see "Funnel Viscosity" on page 132.

Mixtures

Bentonite does not mix well in water containing polymer. To use both, mix bentonite first, then add polymer. When adding other products follow the order listed below.

IMPORTANT:

- If chemicals are added in the wrong order, they will not mix properly and will form clumps.
- If tank contains bentonite/polymer mix and more drilling fluid is needed, completely empty tank and start with fresh water before mixing another batch.

General mixing order:

1. Soda ash
2. Bentonite
3. Polymer
4. Con Det®

Bore-Gel® contains premixed bentonite, polymer, and soda ash. Use approximately 15 lb/100 gal (7 kg/380 L) in normal drilling conditions, up to 45 lb/100 gal (21 kg/380 L) in sand or gravel and up to 50 lb/100 gal (23 kg/380 L) in rock.

Basic Fluid Recipes

Soil type	Mixture/100 gal (378 L) of water	Notes
fine sand	35 lb (16 kg) Bore-Gel®	
coarse sand	35 lb (16 kg) Bore-Gel .5 lb (225 g) No-Sag®	Add .5 lb (225 g) of Quik-Trol® for additional filtrate control
fine sand below water table	40 lb (18 kg) Bore-Gel .75 lb (340 g) Quik-Trol	Add .5 - 1 gal (2-4 L) of Dinomul® in high torque situations
coarse sand below water table	40 lb (18 kg) Bore-Gel .75 lb (340 g) Quik-Trol .75 lb (340 g) No-Sag	Add .5 - 1 gal (2-4 L) of Dinomul in high torque situations
gravel	50 lb (23 kg) Bore-Gel .75 lb (340 g) Quik-Trol .75 lb (340 g) No-Sag	Add .5 lb (225 g) of Barolift® to reduce loss of returns
cobble	50 lb (23 kg) Bore-Gel .75 lb (340 g) Quik-Trol .75 lb (340 g) No-Sag	Add .5 lb (225 g) of Barolift to reduce loss of returns
sand, gravel, clay or shale	35 - 40 lb (16-18 kg) Bore-Gel .5 pt (235 mL) EZ-Mud® .5 gal (2 L) Con-Det	Vary mixture according to percentage of sand and clay
clay	.5 lb (225 g) Poly Bore .5 gal (2 L) Con Det®	Flow rate should be 3-5 parts fluid to 1 part soil. May use .25 - .5 gal (1-2 L) of Penetrol instead of Con Det
swelling/sticky clay	.75 - 1 lb (340-450 g) Poly Bore .5 - 1 gal (2-4 L) Con Det	Flow rate should be 3-5 parts fluid to 1 part soil. May use .25 - .5 gal (1-2 L) of Penetrol instead of Con Det
solid rock (shale)	40 lb (18 kg) Bore-Gel	Use .5 pt (235 mL) of No Sag for large diameter or longer bores
solid rock (other than shale)	40 - 50 lb (18-23 kg) Bore-Gel	Use .5 pt (235 mL) of EZ-Mud in reactive shales
rock/clay mixture	40 - 50 lb (18-23 kg) Bore-Gel .5 pt (235 mL) EZ-Mud	
rock/sand mixture	40 - 50 lb (18-23 kg) Bore-Gel	Use .5 pt (235 mL) of No Sag for large diameter or longer bores
fractured rock	50 lb (23 kg) Bore-Gel .5 - 1lb (225-450 g) No-Sag	Use .5 lb (225 g) of Barolift to reduce fluid loss to formation

Drilling Fluid Requirements

1. Determine drilling conditions and choose appropriate drilling fluid mix.
2. Estimate amount of supplies needed and check availability.
   - Drilling fluid
   - Water supply. If more water than can be carried with the unit will be needed, arrange to transport additional water.
   - Bentonite and/or polymer
3. Check water quality.
   - Use meter or pH test strips to test pH of water. If pH is below 9.0, add 1 lb (454 g) soda ash per tank. Test and repeat until pH is between 9 and 10.
   - Check water hardness using hardness test strips. Treat with soda ash if hardness exceeds 125 ppm.

Funnel Viscosity

Viscosity is the measure of internal resistance of a fluid to flow; the greater the resistance, the higher the viscosity. Viscosity of drilling fluids must be controlled.

To determine viscosity, you will need a Marsh funnel (p/n 259-267) and a measuring cup, available from your Ditch Witch® dealer.

IMPORTANT: Make sure Marsh funnel is clean and free of obstruction and that you have a stopwatch available for timing the viscosity.

1. Using wash hose and a clean container, take a fresh sample of drilling fluid. The sample must be at least 1.5 qt (1.4 L).
2. With finger over bottom of funnel, fill with fluid from the container through the screen until fluid reaches the bottom of the screen.
3. Move funnel over 1 qt (.95 L) container.
4. Remove finger from bottom of funnel and use the stopwatch to count the number of seconds it takes for 1 qt (.95 L) of fluid to pass through the funnel. The number of seconds is the viscosity.
5. Thoroughly rinse measuring cup and Marsh funnel.

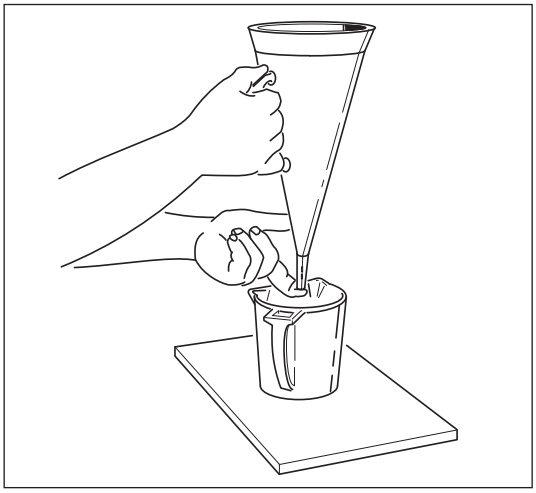

j07om033c.eps

DrillLok™/Tracker Control

Overview

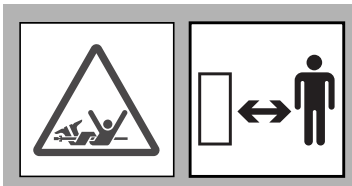

DANGER Rotating shaft will cause death or serious injury. Stay away.

To help avoid injury:

- Use DrillLok/tracker control any time you change downhole tools or during other times when the drill string is exposed.
- If you are not using DrillLok/tracker control, turn off drilling unit before changing downhole tools.

This mode allows the tracker operator to disable hydraulic power to drilling unit thrust and rotation.

NOTICE: This mode does not disable thrust and rotation immediately. Functions are disabled within 16 seconds.

Troubleshooting Tip: If thrust and rotation are not enabled check whether the green DrillLok™/tracker control light (shown), located on drilling unit anchoring console, is on. If it is, thrust and rotation have been disabled by DrillLok/tracker control.

NOTICE: Tracker operator cannot disable thrust and rotation from tracker if DrillLok/tracker control key is installed in drilling unit and turned to the deactivated position.

See "DrillLok™/Tracker control key" on page 22.

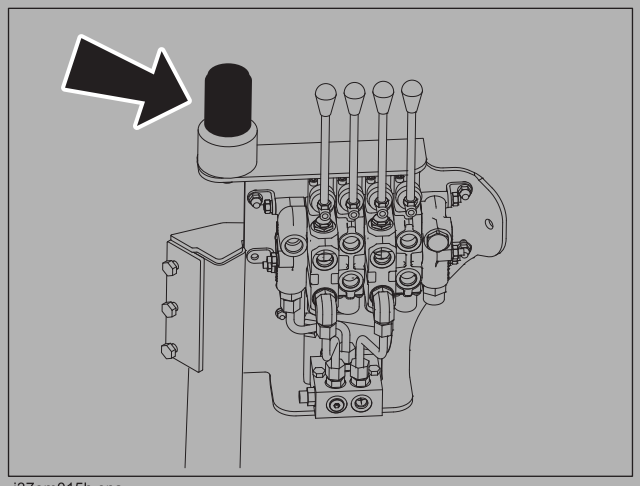

j37om015h.eps

Operation with Ditch Witch® Tracking Equipment: See tracker manual.

Operation without Ditch Witch® Tracking Equipment: Only available on units with DrillLok™ system. See DrillLok™ operation sheet.

Downhole Tools

Nozzles

Nozzles control fluid flow from the pipe to the bore. Select nozzles that will supply **at least** the amount of fluid per minute needed for the flow and pressure you will be using. A nozzle that will supply more fluid per minute is recommended. See your Ditch Witch® dealer for nozzle recommendations.

Bits

Selection

These charts are meant as a guideline only. No one bit works well in all conditions. See your Ditch Witch dealer for soil conditions and bit recommendations for your area.

- 1 = best
- 2 = good
- 3 = fair
- 4 = not recommended

Bit	Sandy Soil	Soft Soil	Medium Soil	Hard Soil	Rocky Soil	Soft Rock	Hard Rock
Sand bit	1	2	3	4	4	4	4
Tornado bit	2	2	2	1	1	3	4
Tuff bit	3	2	1	1	3	1	4
Steep Taper Tuff bit	2	2	1	1	2	1	4
Barracuda bit	2	1	1	2	3	4	4
Steep Taper bit	2	2	1	2	2	3	4
Hard Surface bit	3	1	2	3	4	4	4
Glacier bit	4	4	4	3	1	2	4
Rhino bit	4	4	3	3	1	1	3
Rockmaster	4	4	3	2	1	1	1
Talon bit	3	3	2	1	1	2	4

Soil	Description
sandy soil	sugar sand, blow sand, or other soils where sand is the predominant component
soft soil	sandy loam
medium soil	loams, loamy clays
hard soil	packed clays, gumbo, all compacted soils
rocky soil	chunk rock, glacial till, cobble, rip rap, gravel
soft rock	soft limestone, sandstone, shale, coral, caliche
hard rock	granite, schist, marble, hard limestone

Installation

Remove all paint from mating surfaces before attaching any bit to housing. Install screws (p/n 107-277) and tighten bolts to 120 ft•lb (163 N•m).

Beacon Housings

Lid Installation

1. Clean all threads, bolt holes and mating surfaces.
2. Use removable thread locker (Loctite® 242 or equivalent), if desired.
3. Tighten bolts to 60-70 ft•lb (81-95 N•m).
4. Repeat tightening sequence.

Backreamers

A backreamer enlarges the hole as pipe is pulled back through the bore. No one backreamer works well in all conditions. These charts are meant as a guideline only. See your local Ditch Witch® dealer for soil conditions and backreamer recommendations for your area.

- 1 = best
- 2 = good
- 3 = fair
- 4 = not recommended

Backreamer	Sandy Soil	Soft Soil	Medium Soil	Hard Soil	Rocky Soil	Soft Rock	Hard Rock
Beavertail	3	1	1	1	3	4	4
Three Wing	4	3	3	2	1	1	4
Water Wing	4	3	2	1	2	2	4
Compact Fluted	1	1	2	2	2	3	4
Kodiak	4	3	3	2	1	2	4
Rockmaster	4	4	4	4	3	1	1

IMPORTANT: For soil definitions, see the chart on the previous page.

Backream Fluid Requirements

Backreaming is only successful when enough fluid reaches the bore. The amount of fluid needed depends on size of bore and soil condition.

Follow these steps to find the **minimum** amount of fluid needed in perfect conditions.

IMPORTANT: Use more fluid than recommended or the backream might be dry and unsuccessful.

Instructions	Example
1. Find amount of fluid needed for your size of backreamer. See the table on the next page.	**U.S.** A 6" backreamer requires at least 1.47 gal/ft.
	Metric A 152-mm backreamer requires at least 18.24 L/m.
2. Multiply this number by distance per minute you plan to backream. The answer is an estimate of amount of fluid you will need for each minute of backreaming.	**U.S.** 1.5 gal x 2 ft/min = 3 gal for each minute of backreaming.
	Metric 18 L x .5 m/min = 9 L for each minute of backreaming

IMPORTANT: After you have determined how much fluid you will need, see your Ditch Witch® dealer for nozzle recommendations.

Backream Fluid Requirements

Backreamer/product diameter		Gal/ft	L/m	Backreamer/product diameter		Gal/ft	L/m
.5 in	13 mm	0.01	0.13	13.5 in	343 mm	7.44	92.35
1 in	25 mm	0.04	0.51	14 in	356 mm	8.00	99.31
1.5 in	38 mm	0.09	1.14	14.5 in	368 mm	8.58	106.54
2 in	51 mm	0.16	2.03	15 in	381 mm	9.18	114.01
2.5 in	64 mm	0.25	3.17	15.5 in	394 mm	9.80	121.74
3 in	76 mm	0.37	4.56	16 in	406 mm	10.44	129.72
3.5 in	89 mm	0.5	6.21	16.5 in	419 mm	11.11	137.95
4 in	102 mm	0.65	8.11	17 in	432 mm	11.79	146.44
4.5 in	114 mm	0.83	10.26	17.5 in	445 mm	12.49	155.18
5 in	127 mm	1.02	12.67	18 in	457 mm	13.22	164.17
5.5 in	140 mm	1.23	15.33	18.5 in	470 mm	13.96	173.42
6 in	152 mm	1.47	18.24	19 in	483 mm	14.73	182.92
6.5 in	165 mm	1.72	21.41	19.5 in	495 mm	15.51	192.68
7 in	178 mm	2.00	24.83	20 in	508 mm	16.32	202.68
7.5 in	191 mm	2.29	28.50	20.5 in	521 mm	17.15	212.94
8 in	203 mm	2.61	32.43	21 in	533 mm	17.99	223.46
8.5 in	216 mm	2.95	36.61	21.5 in	546 mm	18.86	234.23
9 in	229 mm	3.30	41.04	22 in	559 mm	19.75	245.25
9.5 in	241 mm	3.68	45.73	22.5 in	572 mm	20.65	256.52
10 in	254 mm	4.08	50.67	23 in	584 mm	21.58	268.05
10.5 in	267 mm	4.50	55.86	23.5 in	597 mm	22.53	279.83
11 in	279 mm	4.94	61.31	24 in	610 mm	23.50	291.86
11.5 in	292 mm	5.40	67.01	24.5 in	622 mm	24.49	304.15
12 in	305 mm	5.88	72.97	25 in	635 mm	25.50	316.69
12.5 in	318 mm	6.37	79.17	25.5 in	648 mm	26.53	329.49
13 in	330 mm	6.90	85.63	26 in	660 mm	27.58	342.53

Quick Wrench

To attach or remove downhole tools, use quick wrench to join or break the joint.

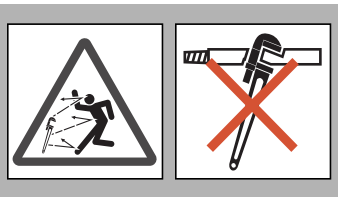

DANGER Moving tools will kill or injure. Never use pipe wrenches on drill string. 273-278

NOTICE: Apply TJC to threads and hand-tighten joint before attaching quick wrench components to tighten joint.

Attach quick wrench in either the join or break position.

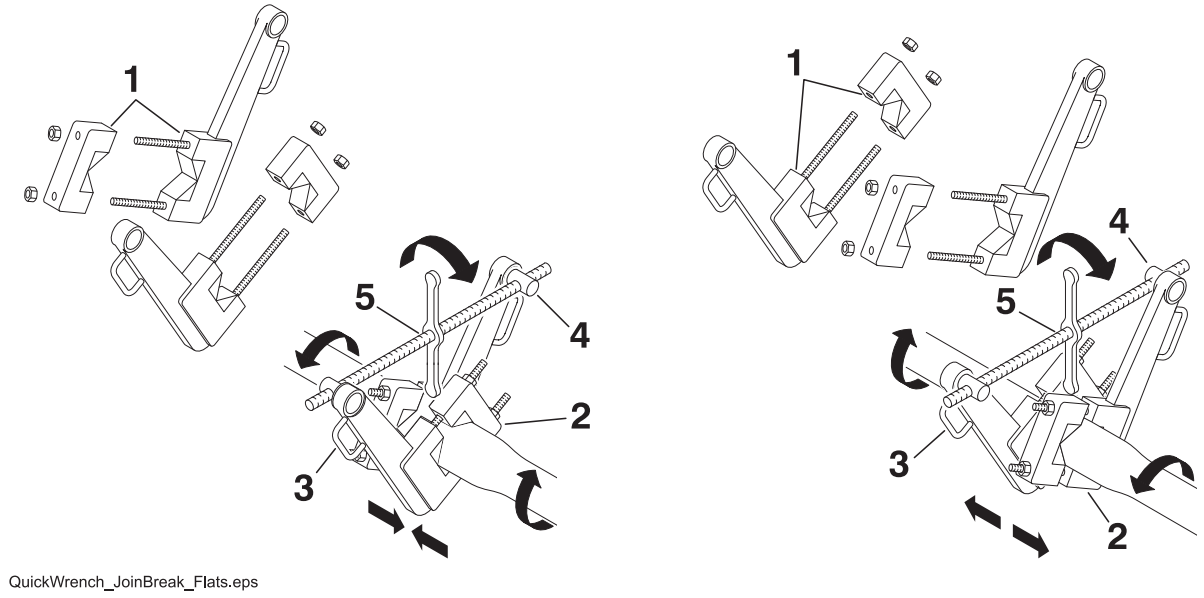

QuickWrench_JoinBreak_Flats.eps

Join **Break**

- Unbolt vise (1) and place jaws around pipe.
- Bolt jaws of vise together.
- Place jaw (2) around pipe, transition sub, or downhole tool.
- Pin handles (3) to wrench jaws. Be sure handles are both up.
- Attach pivot nuts (4) to wrench handles so that screw drive handle (5) is over joint.

To Join

1. Scribe straight line across joint on both sides of separating line (A).
2. Scribe second line (B) on moveable side of joint in the opposite direction of tightening action away from first line the distance indicated below.
   - Power Pipe®: 3/8" (9.5 mm)
   - Power Pipe® Forged: 1/4" (6.4 mm)
3. Turn handle until second line (B) meets first (A).
4. Turn handle opposite direction two turns to relieve pressure.
5. Remove quick wrench components.

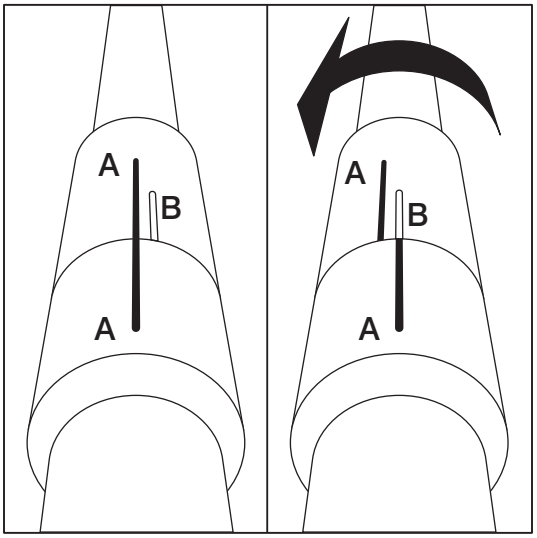

j07om071h.eps

To Break

To help avoid injury: Ensure that engine is not on or DrillLok™/tracker control has disabled the unit before breaking joints.

1. Turn handle until joint is broken.
2. Turn handle opposite direction two turns to relieve pressure.
3. Remove quick wrench components.

Drill Pipe

Perform Regular Drill Pipe Care

Precondition New Pipe

Repeat this procedure **three times** for each piece of pipe before it is used the first time:

1. **Hand-lubricate** entire surface of threads and shoulders of both ends of pipe with copper base tool joint compound. See page 197 for recommended lubricant.
2. Join pipe and tighten joint.
3. Break joint.
4. Move pipe back to box.

NOTICE: Failure to follow this procedure could result in fused joints. Pipe will be damaged or destroyed.

Lubricate Joints Before Each Use

Lubricate threads and shoulders of male joints with copper base tool joint compound. This prevents rust and reduces wear on shoulders and threads. See page 175 for recommended lubricant.

Clean the Threads

Clean the threads as needed with high-pressure water and detergent.

NOTICE: Do not use gasoline or other petroleum-based solvents. This prevents tool joint compound from sticking to the joints and will reduce thread life.

Replace Worn SaverLok® Body

Because each pipe comes in contact with the SaverLok body, check SaverLok body regularly for wear. Compare condition of SaverLok body threads to condition of your drill pipe threads. Replace SaverLok body any time when its thread condition is not better than thread condition of your drill pipe. Failing to replace SaverLok body will result in damaged drill pipe. See page 200 for replacement procedure.

Precondition a new SaverLok body the same way you do new pipe. See “Precondition New Pipe” on page 141.

Rotate Pipe Order

Because the lead drill pipe is in the ground longer, it is subjected to higher shock loads and experiences more wear. To help spread this wear evenly over all pipe, move the lead pipe from the previous job out of the first position.

Use Drill Pipe Correctly

Align the Joints

Always carefully align the male and female ends of pipe before threading them together. Poor alignment can damage the threads and destroy the usefulness of the joint.

NOTICE: If joints get out of alignment during a bore, use frame tilt or rear stabilizers to adjust the unit.

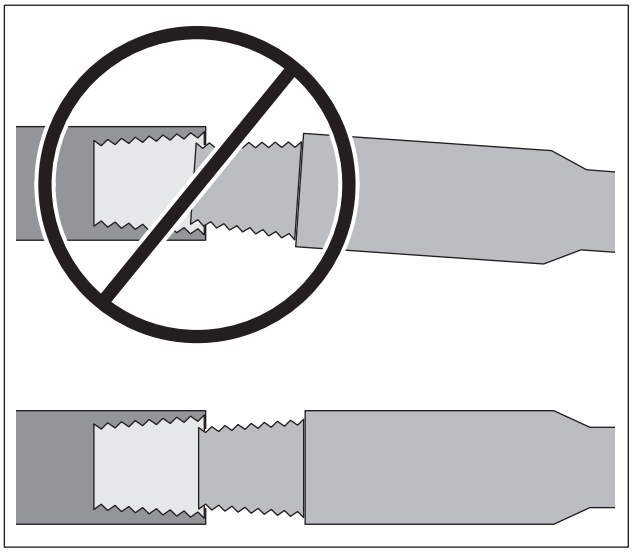

DrillPipe_Align.eps

Clamp Pipe Correctly

Clamp on pipe when joint is between wrenches. Clamp only on the tool joint of the drill pipe as shown. This portion of the drill pipe is designed for clamping and is considerably thicker and stronger than the rest of the pipe.

NOTICE: Clamping anywhere else on the pipe will weaken the pipe. Pipe can later break, even when operating under normal loads.

See "Clamp Pipe" on page 102 for more information.

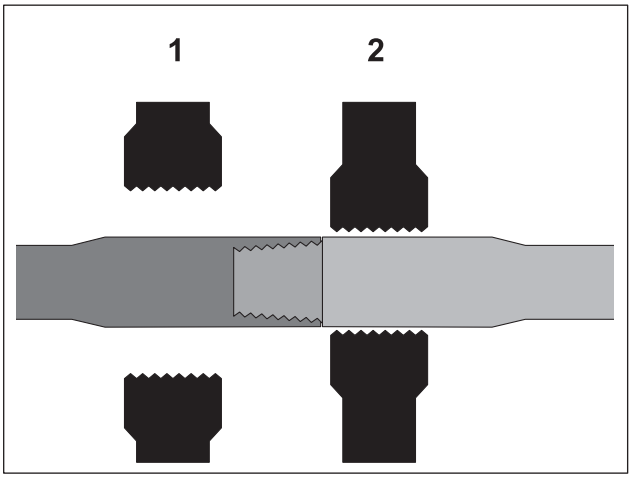

DrillPipe_Clamp.eps

Make Up and Break Out Joints Correctly

This consists of two steps:

- **Make up and break out joints slowly.** Do not ram pipes together during makeup or force them apart during breakout. Carefully time rotation with carriage travel speed during makeup, and use floating carriage to lessen stress on threads during breakout. Always connect and disconnect joints slowly and deliberately. This will help prevent thread crossing, galling, and shoulder swelling.
- **Torque joints fully.** Once the joint is connected and the shoulder faces are touching, torque them to full machine torque. Improperly torqued joints will damage the shoulder faces and threads, and will cause joints to leak or break while drilling or backreaming.

Do not Overwork the Pipe

Never exceed the bend radius for your pipe. See "Recommended Bend Limits" on page 77. Do not oversteer.

NOTICE: Bending pipe more sharply than recommended will damage pipe and cause failure.

Pipe Boxes

Remove/Install Pipe Box

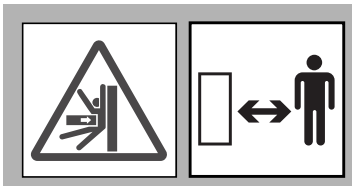

WARNING Crushing weight could cause death or serious injury. Use proper procedures and equipment or stay away.

To help avoid injury

- Lift only one box of pipe at a time.
- Use crane capable of supporting the equipment's size and weight. See page 205 or measure and weigh equipment before lifting.

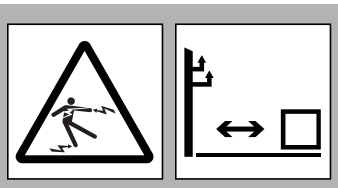

DANGER Electric shock will cause death or serious injury. Stay away. 274-049

To help avoid injury

- Do not attempt to load and unload pipe while drilling or backreaming. Unprotected worker can be injured by electric strike.
- On electrical jobsite, load and unload pipe only if loader is wearing electrically insulating boots and gloves.

Position Lift Pin Block

The pipe box has 7 lift pin block holes.

- Use center hole to keep pipe box level for transporting pipe boxes and loading onto level drill frame.
- Use side holes to angle box for loading onto angled drill frame.

Remove Pipe Box

1. Install lift block (1) and adjust to match drill frame angle.
2. Remove pin (3) from top of pipe box.
3. Remove back pin (2) and two front pins (4).
4. Replace pin into top of pipe box.
5. Move pipe box off of drill frame.

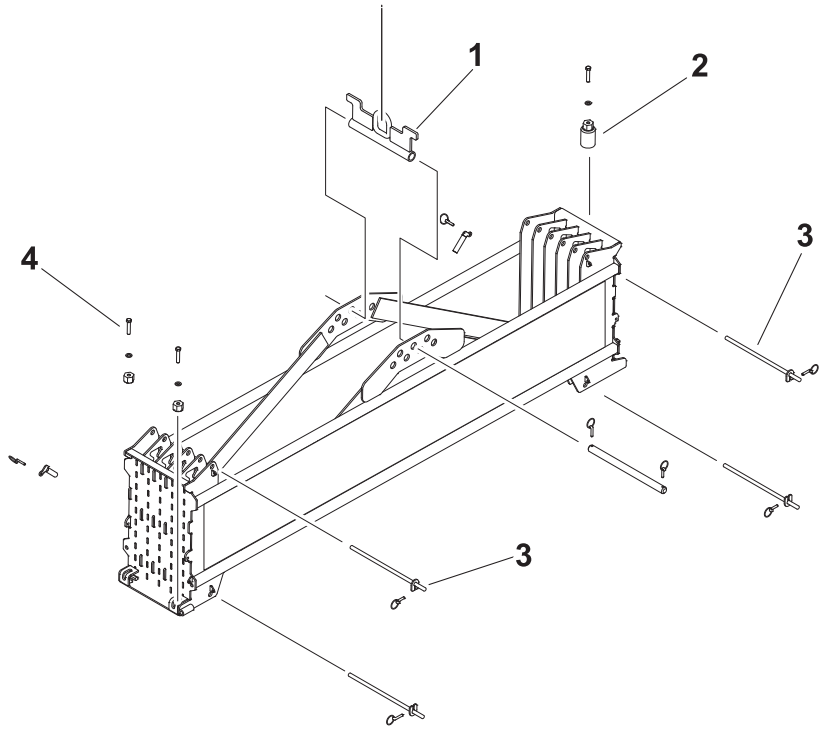

j37om067h.eps

Install Pipe Box

1. Move pipe box over pipeloader and lower into position. En.sure pipe box is moved all the way to the front.
2. Install back pin (2) and two front pins (4).
3. Use pin (3) from top of pipe box to tighten threaded caps.
4. Replace pin into top of pipe box.
5. Remove lift block (1).
6. Raise pipe with lifter on unit.
7. Remove bottom support pins (3) from both ends of pipe box. Store support pins in holes on top of pipe box.

Add/Remove Single Pipe

Load a single drill pipe or up to a whole row of drill pipe into fifth row of pipe box to finish bore without changing pipe boxes. Pipe can be added as soon as fifth row of pipe has been started and other rows are empty.

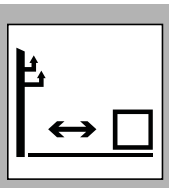

DANGER Electric shock will cause death or serious injury. Stay away. 274-049

To help avoid injury:

- Do not attempt to load and unload pipe while drilling or backreaming. Unprotected worker can be injured by electric strike.
- On electrical jobsite, load and unload pipe only if loader is wearing electrically insulating boots and gloves.

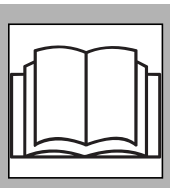

WARNING Read operator's manual. Know how to use all controls. Your safety is at stake. 273-475

To help avoid injury:

- Open or close **both** auxiliary pipe loaders. Moving shuttles with one auxiliary pipe loader open and one closed will damage equipment and cause possible injury.
- Carriage must be in full back position to load and unload pipe.
- Drill pipe is heavy. Have enough people on hand to manually add or remove single pipe to pipe box.

Add Single Pipe

1. Lower shuttle guard and shuttle cover.
2. Move row select to fifth row.
3. Move shuttles out fully.
4. Press top of shuttle lockout switch (shown) to prevent shuttle operation.

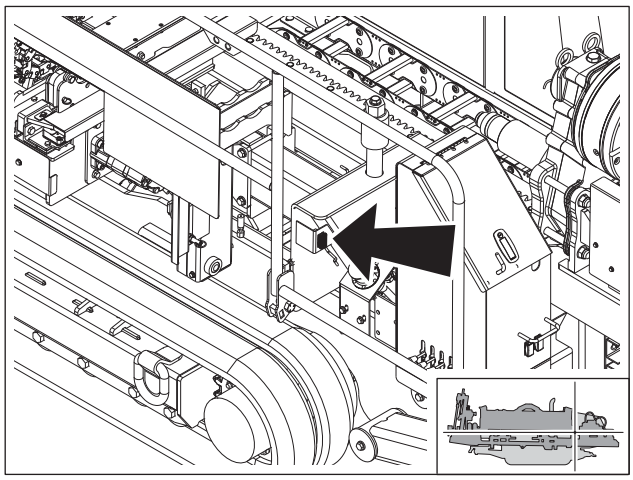

j37om077h.eps

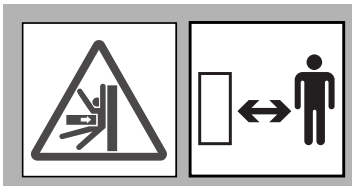

WARNING Crushing weight could cause death or serious injury. Use proper procedures and equipment or stay away.

To help avoid injury:

- Drill pipe is heavy. Have enough people on hand to manually add or remove single pipe to pipe box.
- Do not attempt to move shuttles until everyone is at least 10 ft (3m) away from machine.

5. Remove hold pins (1) on each shuttle and rotate auxiliary pipe loaders (2) into position.

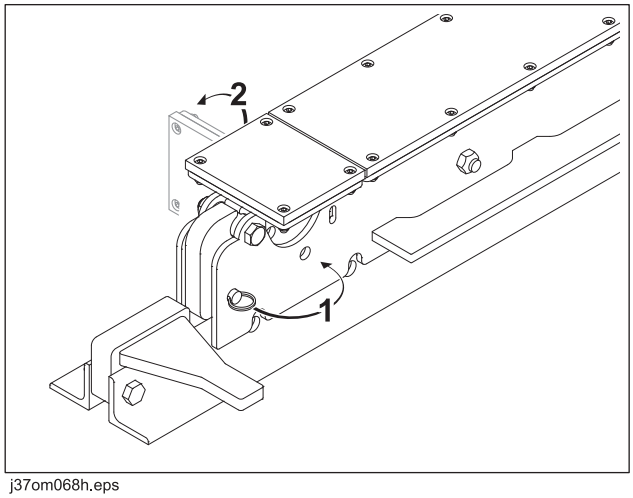

j37om068h.eps

6. Remove pipe stop (stored on outside of drill frame) and attach to front of pipe box .
7. Load a pipe in auxiliary pipe loaders and rest it against pipe stop.
8. Press bottom of shuttle lockout switch to allow shuttle operation. Move at least 10 ft (3 m) away from drill.
9. Move auxiliary pipe loaders under row 5.
10. Raise pipe into row 5.
11. Move shuttles all the way out.
12. Repeat steps 4-8 to load more pieces of pipe into row 5.
13. Move pipe to pipeloader grippers.
    - Raise last pipe into row 5.
    - Move shuttles out.
    - Lower pipe into front grippers.
14. Before operating pipeloader:
    - Close both auxiliary pipe loaders.
    - Remove pipe stop and store it on shuttle guard.
    - Step away from drilling unit.

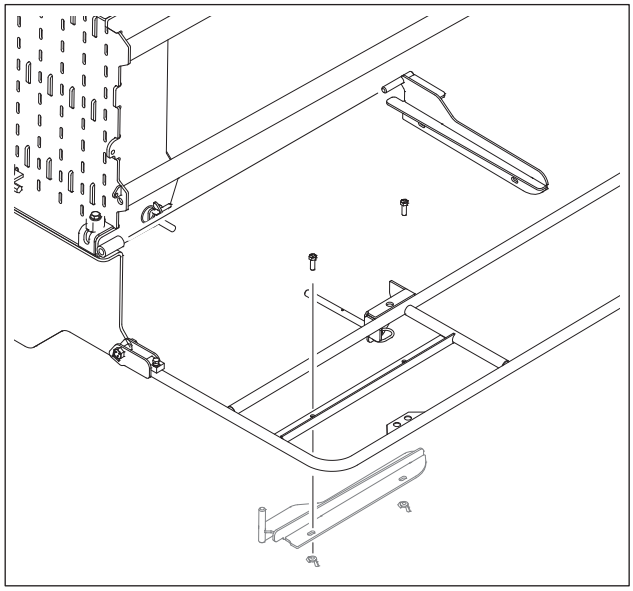

j37om069h.eps

Remove Single Pipe

Unload all drill pipe loaded with auxiliary pipe loaders. Pipe in fifth row of pipe box can be unloaded only when all other rows are empty

1. Lower shuttle guard and shuttle cover.
2. Ensure fifth row is selected.
3. Move shuttles out fully.
4. Press top of shuttle lockout switch (shown) to prevent shuttle operation.

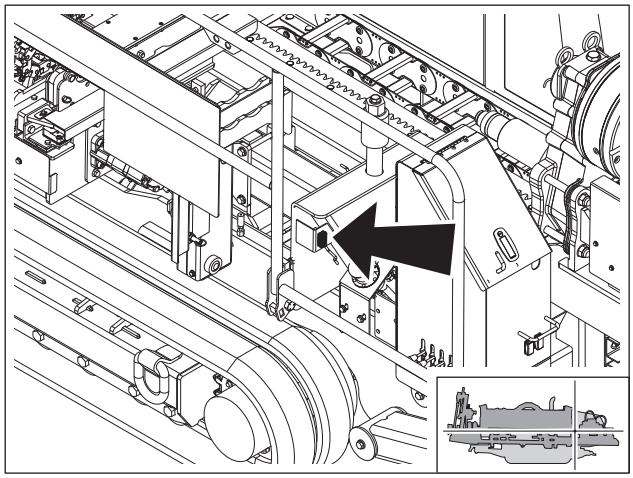

j37om077h.eps

5. Pull and hold pins (1) on each shuttle and slide out auxiliary pipe loaders (2).

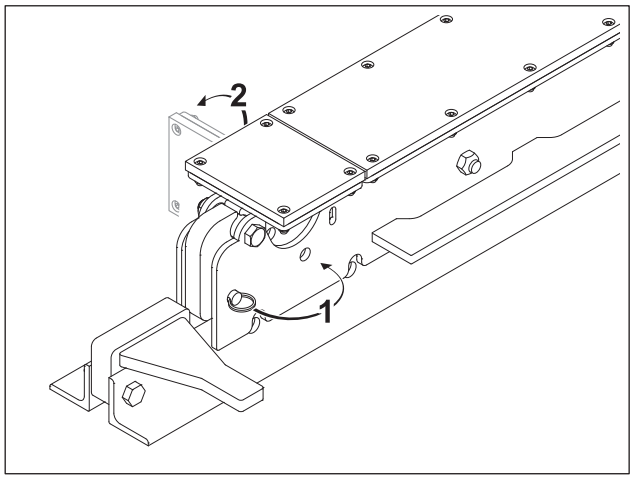

j37om068h.eps

6. Remove pipe stop (stored on outside of drill frame) and attach to front of pipe box.
7. Press bottom of shuttle lockout switch to allow shuttle operation. Move at least 10 ft (3 m) away from drill.
8. Raise pipe in row 5.
9. Move pipe to auxiliary pipe loaders.
   - Move shuttles in.
   - Lower pipe into auxiliary pipe loaders.
10. Move shuttles out.

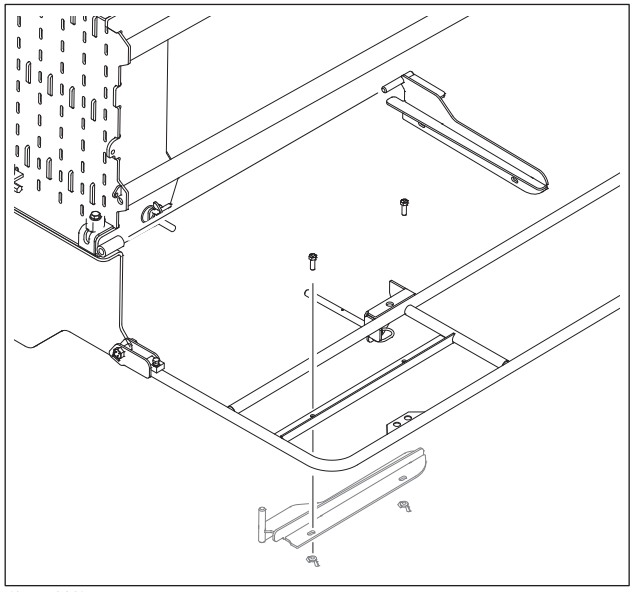
j37om069h.eps

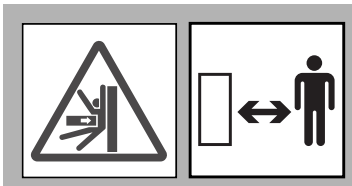

WARNING Crushing weight could cause death or serious injury. Use proper procedures and equipment or stay away.

To help avoid injury:

- Drill pipe is heavy. Have enough people on hand to manually add or remove single pipe to pipe box.
- Do not attempt to move shuttles until everyone is at least 10 ft (3 m) away from machine.

11. Press top of shuttle lockout switch to prevent shuttle operation.
12. Remove pipe from auxiliary pipe loaders and store properly.

13. Repeat steps 7-12 to unload remaining added drill pipe.
14. After all added drill pipe is unloaded with auxiliary pipe loaders:
    - Close both auxiliary pipe loaders.
    - Remove pipe stop and store it on shuttle guard.
15. Press bottom of shuttle lockout switch to allow shuttle operation. Move at least 10 ft (3 m) away from drill.
16. Finish loading remaining drill pipe into row 5 using standard procedure. See "Remove Pipe" on page 116.

Cruise Control

During the bore, you can set the desired thrust/pullback, and rotation speeds to match ground conditions. Cruise control enables the unit to maintain these settings hands-free. You can engage, disengage, override, and resume these settings at any time.

IMPORTANT: In order for cruise control to function, front wrench must be open and shuttles must be under pipe delivery chute (fully retracted).

Engage

Thrust/Pullback and Rotation Cruise	Thrust/Pullback Cruise Only
1. Adjust thrust and rotation to desired speeds. 2. Press set. 3. Release thrust and rotation control(s).	1. Adjust thrust or pullback to desired setting. 2. Press set. 3. Release thrust control. 4. Operator can control rotation with rotation control. There is only clockwise rotation. ***NOTICE:*** Counterclockwise rotation can "break out" pipe joints downhole and unthread the joint. Operator should not rotate counterclockwise long enough to unthread a joint.

Adjust Settings

Setting	Instructions
Thrust or Pullback	• To increase thrust or pullback speed, move thrust control to neutral position and press resume. • To decrease thrust or pullback speed, move thrust control to neutral position and press set.
Rotation (Traditional Controls)	• To increase rotation speed, move joystick to left and press resume. • To decrease rotation speed, move joystick to left and press set.
Rotation (Alternate Controls)	• To increase rotation speed, move thrust control back and press resume. • To decrease rotation speed, move thrust control back and press set.

Note: To obtain fine adjustments, press and hold the multi-use button while making the adjustment.

Override

- To override thrust/pullback settings, move thrust control out of neutral and beyond current setting. Unit will increase to thrust control setting.
- To return to previous setting, release thrust control.

Disengage

To disengage cruise control, move thrust control out of neutral in opposite direction of carriage travel. Carriage stops moving.

Resume

1. Position thrust control out of neutral in direction to be resumed (forward or backward).
2. Press resume. Thrust and rotation resume at the previous settings.

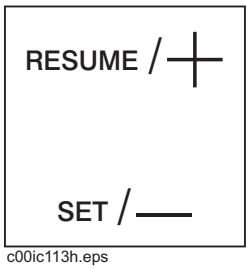

c00ic113h.eps

Diagnostic Codes

The JT25 is equipped with two diagnostic systems: engine and machine. The engine diagnostic system detects critical and non-critical errors within the engine operating system and communicates fault codes on the engine display. The machine diagnostic system detects essential and non-essential errors within the automated machine control system.

Electronic Controlled Engine Overview

This unit is equipped with a self-diagnostic computer-controlled fuel management system. A variety of sensors send input data to an ECU (Electronic Control Unit) that compares inputs with pre-programed parameters and sends output voltage to a variety of actuators to adjust and operate the engine within the specified parameters.

Warning indicators on the engine display tell the operator when critical and non-critical faults develop. Non-critical faults occur when engine sensors detect moderate trouble with coolant temperature, oil pressure, charge air temperature, or fuel temperature. Non-critical faults cause the operator alert indicator to light. Critical faults cause the engine shutdown indicator to light. In both cases, a fault code is stored in the ECU. If the fault corrects itself, the engine will gradually return to normal power. The alert indicator will continue to flash until the trouble goes away, but a fault code will remain stored.

Engine shutdown will occur due to critical faults in engine coolant temperature or oil pressure. Before shutdown, the operator alert indicator will light continuously and the engine will begin a rapid power derate. If the fault does not improve in 30 seconds the engine will shut down.

Reading Engine Diagnostic Codes

Problems with the engine are indicated by a popup message box on the engine display. The popup message is presented as either yellow for non-critical faults, or red for critical engine faults.

To hide/show active codes:

Press the soft key on the right next to the Hide icon. The message box will disappear, however the Warning or Stop message will remain on the screen until the fault is cleared.

Diagnostic Codes

SPN	FMI	Warning Color	Circuit	Error Description
27	4	amber	EGR valve position	voltage below normal, or shorted to low source
91	3	red	accelerator pedal or lever position sensor 1	voltage above normal, or shorted to high source
91	4	red	accelerator pedal or lever position sensor 1	voltage below normal, or shorted to low source
91	1	red	accelerator pedal lever position 1 sensor frequency	data valid but below normal operational range - most severe level

SPN	FMI	Warning Color	Circuit	Error Description
91	0	red	accelerator pedal or lever position sensor 1	data valid, but above normal operational range - most severe level
91	2	red	accelerator pedal or lever position sensor 1	data erratic, intermittent or incorrect
91	19	red	SAE J1939 multiplexed accelerator pedal or lever sensor system	received network data in error
91	9	red	SAE J1939 multiplexed accelerator pedal or lever sensor system	abnormal update rate
95	16	amber	fuel filter differential pressure	data valid but above mornal operating range, moderately severe
97	15	amber, blinking	water in fuel indicator	data valid but above normal operating range, least severe level
97	3	amber	water in fuel indicator sensor circuit	voltage above normal or shorted to high source
97	4	amber	water in fuel indicator sensor circuit	voltage below normal or shorted to low source
100	3	amber	engine oil rifle pressure 1 sensor	voltage above normal or shorted to high source
100	4	amber	engine oil rifle pressure 1 sensor	voltage below normal or shorted to low source
100	18	amber	engine oil rifle pressure	data valid but below normal operationg range - moderately severe level
100	1	red	engine oil rifle pressure	data valid but below normal operating range - most severe level
100	2	amber	engine oil rifle pressure	data erratic, intermittent or incorrect
101	16	amber	crankcase pressure	data valid but above normal operating range, moderately severe level
101	0	red	crankcase pressure	data valid but above normal operational range, most severe level
101	3	amber	crankcase pressure	voltage above normal or shorted to high source
101	4	amber	crankcase pressure	voltage below normal or shorted to low source
101	2	amber	crankcase pressure	data erratic, intermittent, or incorrect

SPN	FMI	Warning Color	Circuit	Error Description
101	15	amber blinking	crankcase pressure	data valid but above normal operating range, least severe level
102	3	amber	intake manifold 1 pressure sensor	voltage above normal or shorted to high source
102	4	amber	intake manifold 1 pressure sensor	voltage below normal or shorted to low source
102	2	amber	intake manifold 1 pressure	data erratic, intermittent, or incorrect
103	16	amber	turbocharger 1 speed	data valid but above normal operating range, moderately severe level
103	18	amber	turbocharger 1 speed	data valid but below normal operating range, moderately severe level
103	15	amber	turbocharger 1 speed	data valid but above normal operating range, least severe level
105	3	amber	intake manifold 1 temperature sensor	voltage above normal or shorted to high source
105	4	amber	intake manifold 1 temperature sensor	voltage below normal or shorted to low source
105	0	red	intake manifold 1 temperature	data valid but above normal operational range, most severe level
105	16	amber	intake manifold 1 temperature	data valid but above normal operating range, moderately severe level
108	3	amber	barometric pressure sensor	voltage above normal or shorted to high source
108	4	amber	barometric pressure sensor	voltage below normal or shorted to low source
108	2	amber	barometric pressure sensor	data erratic, intermittent, or incorrect
110	3	amber	engine coolant temperature 1 sensor	voltage above normal or shorted to high source
110	4	amber	engine coolant temperature 1 sensor	voltage below normal or shorted to low source
110	16	amber	engine coolant temperature	data valid but above normal operating range, moderately severe level
110	0	red	engine coolant temperature	data valid but above normal operational range, most severe level
110	31	amber	engine coolant temperature	condition exists
111	3	amber	coolant level sensor 1	voltage above normal or shorted to high source

SPN	FMI	Warning Color	Circuit	Error Description
111	4	amber	coolant level sensor 1	voltage below normal or shorted to low source
111	18	amber	coolant level	data valid but below normal operating range, moderately severe level
111	1	red	coolant level	data valid but below normal operational range, most severe level
111	17	amber blinking	coolant level	data valid but below normal operating range, least severe level
157	0	red	injector metering rail 1 pressure sensor	data valid but above normal operational range, most severe level
157	3	amber	injector metering rail 1 pressure sensor	voltage above normal or shorted to high source
157	4	amber	injector metering rail 1 pressure sensor	voltage below normal or shorted to low source
157	16	amber	injector metering rail 1 pressure	data valid but above normal operating range, moderately severe level
157	18	amber	injector metering rail 1 pressure	data valid but below normal operating range, moderately severe level
157	0	amber	injector metering rail 1 pressure	data valid but above normal operational range, most severe level
168	18	amber	battery 1 voltage	data valid but below normal operating range, moderately severe level
168	16	amber	battery 1 voltage	data valid but above normal operating range, moderately severe level
190	0	red	engine crankshaft speed/ position	data valid but above normal operational range, most severe level
190	2	amber	engine crankshaft speed/ position	data erratic, intermittent, or incorrect
190	2	none	engine crankshaft speed/ position	data erratic, intermittent, or incorrect
412	3	amber	exhaust gas recirculation temperature sensor	voltage above normal or shorted to high source
412	4	amber	exhaust gas recirculation temperature sensor	voltage below normal or shorted to low source
412	15	none	exhaust gas recirculation temperature sensor	data valid but above normal operating range, least severe level

SPN	FMI	Warning Color	Circuit	Error Description
558	2	amber	accelerator pedal or lever idle validation switch	data erratic, intermittent, or incorrect
558	13	red	accelerator pedal or lever idle validation switch	out of calibration
558	9	red	accelerator pedal or lever idle validation switch	abnormal update rate
612	2	red	engine magnetic speed/ position lost both of two signals	data erratic, intermittent or incorrect
627	12	amber	injector power supply	bad intelligent device or component
627	2	none	power supply lost with ignition on	data erratic, intermittent, or incorrect
629	12	red	engine control module critical internal failure	bad intelligent device or component
629	12	amber	engine control module warning internal hardware failure	bad intelligent device or component
633	31	amber	electronic fuel injection control valve	condition exists
639	9	amber	SAE J1939 multiplexing PGN timeout error	abnormal update rate
639	13	amber	SAE J1939 multiplexing configuration error	out of calibration
651	5	amber	injector solenoid driver cylinder 1	current below normal or open circuit
652	5	amber	injector solenoid driver cylinder 2	current below normal or open circuit
653	5	amber	injector solenoid driver cylinder 3	current below normal or open circuit
654	5	amber	injector solenoid driver cylinder 4	current below normal or open circuit
677	3	amber	starter relay driver	voltage above normal or shorted to high source
677	4	amber	starter relay driver	voltage below normal or shorted to low source
703	14	red	auxiliary equipment sensor input 3 engine protection critical	special instruction

SPN	FMI	Warning Color	Circuit	Error Description
723	7	amber	engine speed/position camshaft and crankshaft misalignment	mechanical system not responding or out of adjustment
723	2	amber	engine camshaft speed/ position sensor	data erratic, intermittent, or incorrect
723	2	none	engine camshaft speed/ position sensor	data erratic, intermittent, or incorrect
729	3	amber	engine intake air heater 1	voltage above normal or shorted to high source
729	4	amber	engine intake air heater 1	voltage below normal or shorted to low source
974	19	red	SAE J1939 multiplexing remote accelerator pedal or lever position sensor system	received network data in error
1172	3	amber	turbocharger 1 compressor intake temperature	voltage above normal or shorted to high source
1172	4	amber	turbocharger 1 compressor intake temperature	voltage below normal or shorted to low source
1209	3	amber	exhaust gas pressure sensor	voltage above normal or shorted to high source
1209	4	amber	exhaust gas pressure sensor	voltage below normal or shorted to low source
1209	2	amber	exhaust gas pressure sensor	data erratic, intermittent or incorrect
1347	4	amber	engine fuel pump pressurizing assembly 1	voltage below normal or shorted to low source
1347	3	amber	engine fuel pump pressurizing assembly 1	voltage above normal or shorted to high source
1623	9	amber	tachograph output shaft speed	abnormal update rate
1623	19	amber	tachograph output shaft speed	received network data in error
1675	31	none	[C2ST] engine starter mode overcrank protection	condition exists
2623	3	amber	accelerator pedal or lever position sensor 2	voltage above normal or shorted to high source
2623	4	amber	accelerator pedal or lever position sensor 2	voltage below normal or shorted to low source

SPN	FMI	Warning Color	Circuit	Error Description
2791	13	amber	EGR valve control	out of calibration
2791	15	amber	EGR valve control over temperature	data valid but above normal operating range, least severe level
2791	5	amber	EGR valve control	current below normal or open circuit
2791	6	amber	EGR valve control circuit	current above normal or grounded circuit
2791	7	amber	EGR valve control circuit	mechanical system not responding or out of adjustment
2797	13	none	engine injector bank 1 barcodes	out of calibration
3509	4	amber	sensor supply 1	voltage below normal or shorted to low source
3509	3	amber	sensor supply 1	voltage above normal or shorted to high source
3510	4	amber	sensor supply 2	voltage below normal or shorted to low source
3510	3	amber	sensor supply 2	voltage above normal or shorted to high source
3511	4	amber	sensor supply 3	voltage below normal or shorted to low source
3511	3	amber	sensor supply 3	voltage above normal or shorted to high source
3512	4	amber	sensor supply 4	voltage below normal or shorted to low source
3512	3	amber	sensor supply 4	voltage above normal or shorted to high source
3513	4	amber	sensor supply 5	voltage below normal or shorted to low source
3513	3	amber	sensor supply 5	voltage above normal or shorted to high source
3514	4	amber	sensor supply 6	voltage below normal or shorted to low source
3514	3	amber	sensor supply 6	voltage above normal or shorted to high source
3597	18	amber	ECU power output supply voltage 1	data valid but below normal operating range, moderately severe level

SPN	FMI	Warning Color	Circuit	Error Description
5571	7	none	[C2ST] High pressure common rail fuel pressure relief valve	mechanical system not responding or out of adjustment

Reading Machine Diagnostic Codes

Use the red diagnostic light to learn the condition of the diagnostic system. Under normal operating conditions, the diagnostic light will light steadily for two seconds after ignition is turned on to indicate light is working. It will then go out and remain out unless a diagnostic code is recorded.

If diagnostic codes are detected, the diagnostic light will either flash on and off for 10 seconds to indicate a non-essential code or remain on to indicate an essential code.

Code Severity Levels

Diagnostic codes are given one of two levels of severity.

- A **non-essential** code affects non-essential functions of the unit. If the system detects a non-essential problem, a diagnostic code will be recorded and the diagnostic light will flash for 10 seconds and then go out. Each time ignition is turned on, full operation will be available until the diagnostic system detects a problem.
- An **essential** code affects rotation, thrust, drilling fluid, or ground drive. If the system detects an essential problem, a diagnostic code will be recorded and the diagnostic light will cycle on for three seconds and off for 1/2 second. Some machine functions may not work until the problem is corrected. Each time ignition is turned on, full operation will be available until the diagnostic system detects a problem.

Review Modes

IMPORTANT: Do not turn off ignition. Diagnostic codes are cleared each time ignition is turned off.

View All Codes	View Codes Individually
1. Ensure that engine is running and no one is sitting in operator's seat. 2. Press and hold RESUME for two seconds. 3. Diagnostic light will flash code 12 (flash, pause, flash, flash, longer pause) to indicate review mode is operational. 4. After flashing code 12, all diagnostic codes detected since the last time the ignition was turned on are flashed three times each. 5. To save diagnostic codes, continue normal operation. Do not turn ignition off. 6. Once the problem has been corrected, clear all codes by turning ignition off.	1. Ensure that engine is running and no one is sitting in operator's seat. 2. Press and hold SET for two seconds. 3. Diagnostic light will flash code 12 (flash, pause, flash, flash, longer pause) to indicate review mode is operational. 4. After code 12 is flashed, • Press RESUME to see same code again or press SET to see next code. • Continue pressing SET until all diagnostic codes detected since the last time the ignition was turned on are flashed. Cycle is complete when code 12 flashes again. 5. To save diagnostic codes, continue normal operation. Do not turn ignition off. 6. Once the problem has been corrected, clear all codes by turning ignition off.

Diagnostic Code Interpretation

Diagnostic codes are displayed through a series of light flashes and pauses. Count number of flashes and pauses to interpret code.

Example: "Flash, flash, flash, pause, flash, flash, longer pause" represents code 32.

Tips for interpreting codes:

- In View All Codes mode, the green control cycle light will come on the first time the red diagnostic light flashes a code. The green control cycle light will then go off and the red diagnostic light will flash the code two more times.
- Codes are displayed from lower to higher numbers.
- Code 11 is not used.
- Code 12 signals successful entry into and exit from review mode.

Machine Diagnostic Codes

The following table lists the attributes of each diagnostic code. Information presented includes: code number, condition causing code to be sent, result, and level of severity.

Code	Condition	Result	Severity
12	normal review mode entry	code is not stored	n/a
13	no 12V power to controller	drill and drive are blocked	essential
14	no 5V power from controller	drill and drive are blocked	essential
15	unknown output driver continuity problem	code is stored	non-essential
32	no continuity to shuttle extend solenoid	add pipe or remove pipe is aborted and code is stored	non-essential
33	no continuity to shuttle retract solenoid	add pipe or remove pipe is aborted and code is stored	non-essential
34	no continuity to pipe lift solenoid	add pipe or remove pipe is aborted and code is stored	non-essential
35	no continuity to pipe lower solenoid	add pipe or remove pipe is aborted and code is aborted	non-essential
41	no continuity to pipe grip solenoid	add pipe or remove pipe is aborted and code is stored	non-essential
42	no continuity to pipe release solenoid	add pipe or remove pipe is aborted and code is stored	non-essential
43	no continuity to lube rear solenoid	add pipe or remove pipe is aborted and code is stored	non-essential
44	no continuity to lube front solenoid	add pipe or remove pipe is aborted and code is stored	non-essential
45	no continuity to carriage two speed solenoid	code is stored	non-essential
51	no continuity to rotation cw solenoid	cruise control is blocked	essential
52	no continuity to rotation ccw solenoid	cruise control is blocked	essential
53	no continuity to thrust forward solenoid	cruise control is blocked	essential
54	no continuity to thrust backward solenoid	cruise control is blocked	essential
61	no continuity to pipe box in solenoid	code is stored	non-essential
62	no continuity to pipe box out solenoid	code is stored	non-essential

Code	Condition	Result	Severity
63	no continuity to auxiliary dump valve	add pipe or remove pipe aborted and code is stored	non-essential
65	no continuity to thrust neutral valve	cruise control is blocked	essential
66	no 6V internal power	add pipe, remove pipe, drive, and cruise control are blocked	essential
71	no continuity to drive selector valve	drive is blocked	essential
73	no continuity to throttle up solenoid	code is stored	non-essential
74	no continuity to throttle down solenoid	code is stored	non-essential
114	no continuity to drilling fluid pump solenoid	code is stored	essential
122	no continuity to drilling fluid check valve	code is stored	non-essential
131	no continuity to thrust rear home switch	add pipe and remove pipe are blocked	non-essential
132	no continuity to thrust front home switch	add pipe and remove pipe are blocked	non-essential
133	no continuity to shuttle home switch	add pipe and remove pipe are blocked	non-essential
134	no continuity to front wrench switch	add pipe and remove pipe are blocked	non-essential
144	drive joystick left/right out of range	drive is blocked	essential
145	drive joystick forward/backward out of range	drive is blocked	essential
151	drill joystick left/right out of range	rotation, cruise control, and carve mode are blocked	essential
152	drill joystick forward/backward out of range	thrust, cruise control, and carve mode are blocked	essential
154	drilling fluid potentiometer out of range	code is stored	essential
164	no continuity to DrillLok™/tracker control input	code is stored	non-essential
166	no continuity to thrust rear stop switch	code is stored	non-essential
171	no continuity to pipe grip rocker switch	code is stored	non-essential

Code	Condition	Result	Severity
172	no continuity to pipe shuttle rocker switch	code is stored	non-essential
173	no continuity to pipe lift rocker switch	code is stored	non-essential
174	no continuity to pipe box rocker switch	code is stored	non-essential
175	no continuity to pipe lube rocker switch	code is stored	non-essential
184	no continuity to throttle rocker switch	code is stored	non-essential
185	no continuity to set/resume rocker switch	code is stored	non-essential
221	system voltage is below 12.5V	code is stored	non-essential
233	drill and drive inputs both on	drill and drive are blocked	essential
234	add pipe and remove pipe inputs both on	add pipe and remove pipe are blocked	non-essential
235	front home and rear home inputs both on	add pipe and remove pipe are blocked	non-essential
241	shuttles not responding correctly	add pipe or remove pipe is aborted and code is stored	non-essential
242	front wrench not responding correctly	code is stored	non-essential
254	error reading setup table information	add pipe and remove pipe are blocked	essential
255	undefinable diagnostic code reported	code is stored	non-essential

Complete the Job

Chapter Contents

Antifreeze Drilling Unit 166

- Add Antifreeze 166
- Reclaim Antifreeze 167

Rinse Equipment 167

Disconnect 169

Stow Tools 169

Antifreeze Drilling Unit

Your drilling unit can be left overnight in freezing conditions by filling fluid lines with a polyproplyene-based antifreeze (p/n 265-644) with optional antifreeze system before shutdown.

Add Antifreeze

1. Fill antifreeze tank with 8 gal (30 L) of approved antifreeze.
2. Install plug on suction side of drilling fluid pump.
3. Open valve below antifreeze tank.
4. Install antifreeze reclaimer adapter in spindle. Ensure valve (shown) is open.
5. Turn drilling fluid potentiometer counterclockwise to zero position.
6. Start unit and set throttle to slow position.
7. Set drilling fluid pump switch to on position.
8. Slowly turn drilling fluid potentiometer clockwise until indicator light comes on. If light does not come on, press drilling fluid pump switch.
9. Run drilling fluid pump until antifreeze comes out of spindle.
10. Turn drilling fluid pump switch to off position. Close valve on antifreeze reclaimer adapter.
11. Open valve below right operator's console (shown).
12. Repeat steps 5-8.
13. Close valve below right console when antifreeze runs out of valve below right console.
14. Turn drilling fluid pump switch to off position.

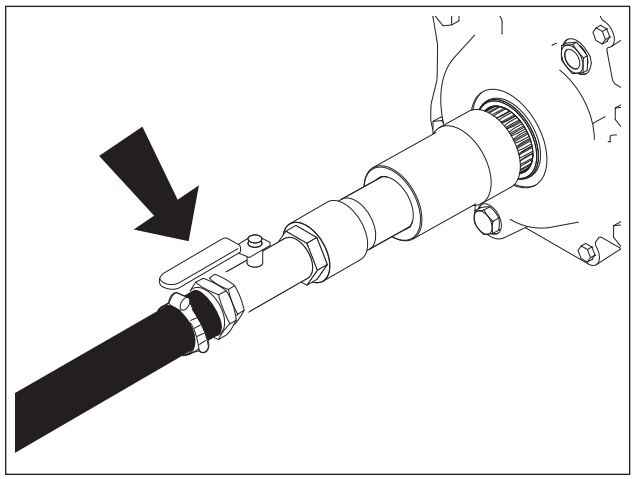

j37om066h.eps

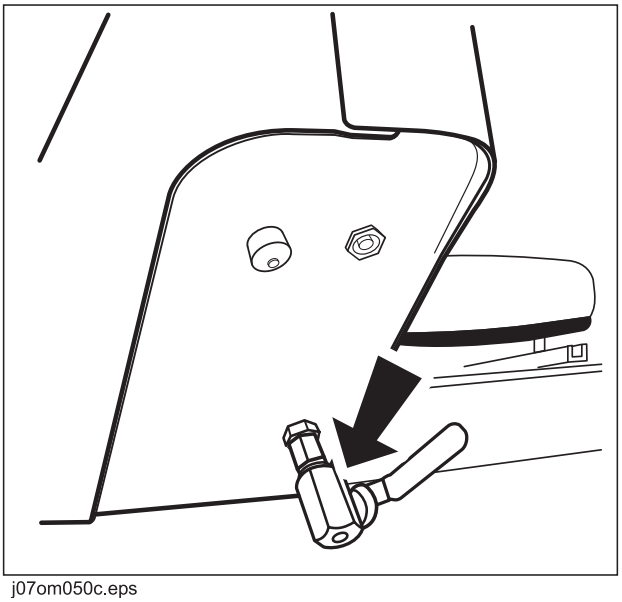

j07om050c.eps

Reclaim Antifreeze

1. Hold hose on antifreeze reclaimer over top of antifreeze tank.
2. Open valve on reclaimer (shown).
3. Connect drilling fluid transfer hose from tanks to drilling fluid pump inlet.
4. Close valve below antifreeze tank.
5. Start unit and run at low throttle.
6. Turn drilling fluid pump on low speed.
7. Turn drilling fluid pump off when drilling fluid comes out of reclaimer hose.
8. Remove antifreeze reclaimer.

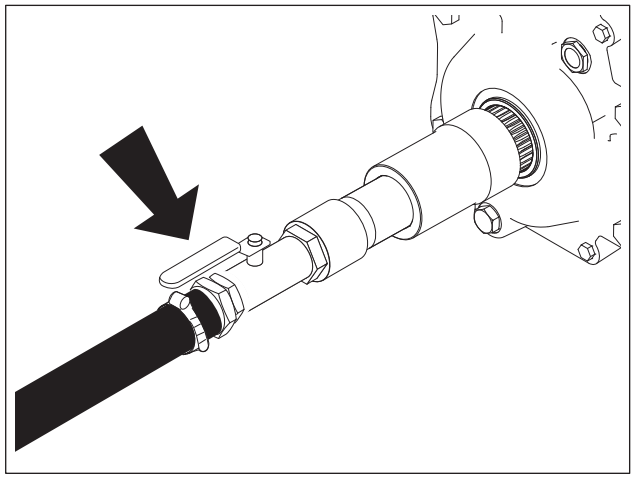

j37om066h.eps

IMPORTANT: Antifreeze can be removed from antifreeze tank and disposed of properly or it can be reused until it is too diluted with drilling fluid to protect against freezing.

Rinse Equipment

Using Washwand

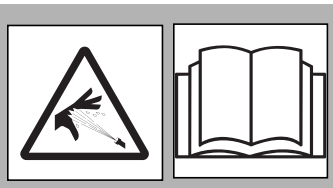

WARNING Pressurized fluid or air could pierce skin and cause severe injury. Refer to operator's manual for proper use. 270-6035

To help avoid injury:

- Never use high flow when using washwand.
- Prime the drilling fluid pump before operating washwand. Failure to prime the drilling fluid pump will cause flow fluctuations, which will make it difficult to control the washwand. For instructions, see "Connect Fluid System" on page 99.

NOTICE: Do not spray water onto operator's console. Do not spray water onto electrical center in engine compartment. Electrical components could be damaged. Wipe down instead.

1. Connect the washwand at quick connect (2) at rear of unit. Close valve to stop water flow. Close valve (1) to shut off flow to spindle.
2. Spray water onto equipment to remove dirt and mud. Some pressure might be needed to remove dried mud from wrench area.

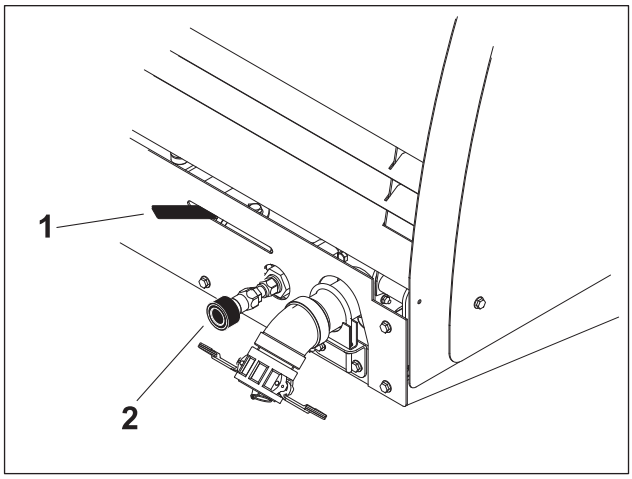

j37om016h.eps

Disconnect

Disconnect and store the following hoses and cables (if used):

- electric strike system voltage stake
- fluid hose

Stow Tools

Make sure all quick wrenches, bits, pullback devices, and other tools are loaded and properly secured on trailer or truck.

Service

Chapter Contents

Service Precautions 173

- Welding Precaution 172
- Washing Precaution 172
- Working Under Drilling Unit 173

Recommended Lubricants/Service Key 175

- Approved Coolant 176
- Approved Fuel 177

10 Hour 178

50 Hour 185

250 Hour 189

500 Hour 190

1000 Hour 191

2000 Hour 194

As Needed 195

Service Precautions

WARNING Read operator's manual. Know how to use all controls. Your safety is at stake. 273-475

To help avoid injury:

- Unless otherwise instructed, all service should be performed with engine off.
- Refer to engine manufacturer's manual for engine maintenance instructions.

Welding Precaution

NOTICE: Welding can damage electronics.

- Welding currents can damage electronic components. Always disconnect the ECU ground connection from the frame, harness connections to the ECU, and other electronic components prior to welding on machine or attachments. Connect welder ground close to welding point and make sure no electronic components are in the ground path.
- Disconnect battery at battery disconnect switch before welding to prevent damage to battery. See "Check Batteries" on page 201.
- Do not turn off battery disconnect switch with engine running, or alternator and other electronic devices may be damaged.

Washing Precaution

NOTICE: Water can damage electronics. When cleaning equipment, do not spray electrical components with water.

Working Under Drilling Unit

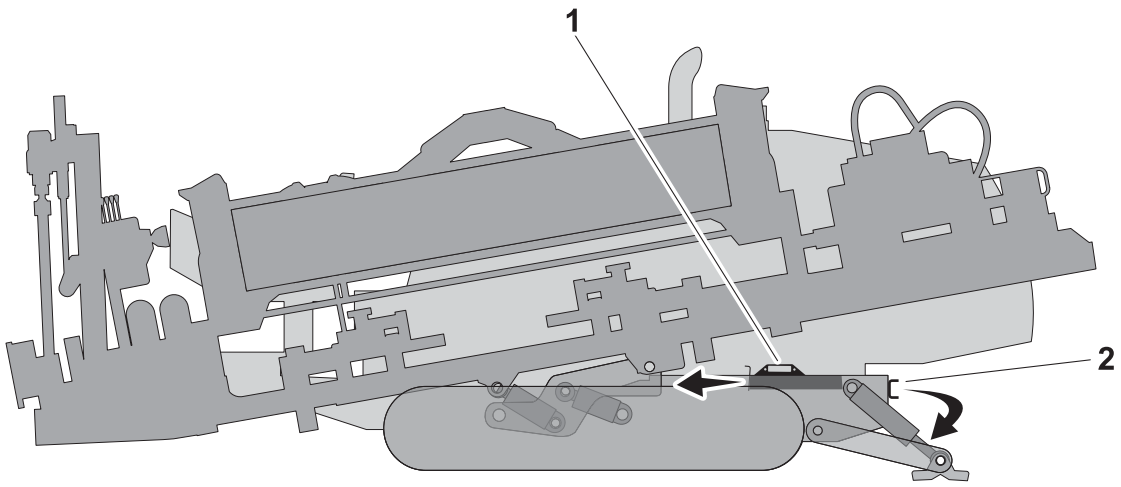

j37om056h.eps

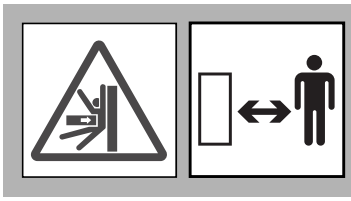

WARNING Crushing weight could cause death or serious injury. Use proper procedures and equipment or stay away.

Before working under area of drilling unit supported by a stabilizer, make sure drilling unit is parked on hard surface.

1. Remove cylinder locks from storage at rear of pipe box (2) and place over extended cylinder rods (shown) with curved ends toward stabilizer shoes.
2. Lower unit until load is supported by cylinder locks.

Before working under area of drilling unit supported by **frame tilt cylinder**, make sure drilling unit is parked on hard surface.

1. Remove drill frame support stored at rear of unit (1) and place under drill frame (shown).
2. Lower drill frame until load is supported by drill frame support.

Replace cylinder locks or drill frame support if damaged.

Opening/Closing Engine Enclosure

To open:

1. Unlock enclosure doors at latches (shown), if locked.
2. Open doors outward.
3. Lift up on upper panel for greater access to engine compartment.

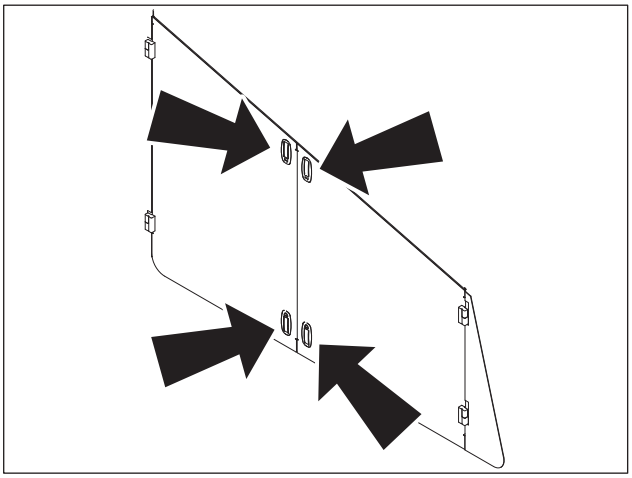

j37om057h.eps

To close:

1. Disengage the up-latch on the upper panel by holding it up as the hood is pulled up.
2. Pull down on the panel and lower it completely.
3. Disengage the latch on each door by holding it up as door is pulled out. Close door and repeat for other door.
4. Lock doors at latches, if desired.

Recommended Lubricants/Service Key

Item	Description
Tier 4i DEO	Diesel engine oil meeting or exceeding Cummins® 20081, API CJ-4, ACEA E9. • Engine must use low SAPS oil (ash will plug aftertreatment device.) • Use viscosity grade SAE 15W40 unless ambient temperatures below 5° F (-15° C) are expected. Lower viscosity oils must meet the performance specifications shown above. API American Petroleum Institute, ACEA European Automobile Manufacturer's Association.
Tier 3 DEO	Diesel engine oil meeting or exceeding Cummins 20078, API CH-4, ACEA E5. ***NOTICE:*** Shipped from factory with CJ-4 DEO. Change oil initially at 250 hrs. Use viscosity grade SAE 15W40 unless ambient temperatures below 5° F (-15° C) are expected. Lower viscosity oils must meet the performance specifications shown above. API American Petroleum Institute, ACEA European Automobile Manufacturer's Association.
NDO	SAE 30 Non-detergent oil
MPG	Multipurpose grease. Use polyurea based NLGI GC-LB Grade 1.5 or lithium based NLGI GC-LB Grade 2.
EPG	Open gear extreme pressure lubricant (p/n 256-666)
EPS	Open gear extreme pressure lubricant, spray (p/n 256-034)
MPL	Multipurpose gear oil meeting API service classification GL-5 (SAE 80W90)
THF	Tractor hydraulic fluid, similar to Phillips 66® HG, Mobilfluid® 424, Chevron® Tractor Hydraulic Fluid, Texaco® TDH Oil, or equivalent
TJC	Tool joint compound: Ditch Witch® standard (p/n 259-858) or summer grade (p/n 256-031)
DEAC	Diesel engine antifreeze/coolant meeting ASTM D5345 (prediluted) or D4985 (concentrate)

	Check level of fluid or lubricant		Check condition
	Filter		Change, replace, adjust, service or test

Proper lubrication and maintenance protects Ditch Witch® equipment from damage and failure. Service intervals listed are for minimum requirements. In extreme conditions, service machine more frequently. Use only genuine Ditch Witch parts, filters, approved lubricants, TJC, and approved coolants to maintain warranty. Fill to capacities listed in "Specifications" on page 205.

For more information on engine lubrication and maintenance, see your engine manual.

IMPORTANT: Use the "Service Record" on page 213 to record all required service to your machine.

Approved Coolant

This unit was filled with John Deere® Cool-Gard® coolant before shipment from factory. Add only John Deere Cool-Gard (p/n 255-006) or any fully-formulated, ethylene glycol based, low-silicate, heavy-duty diesel engine coolant meeting ASTM specification D5345 (prediluted) or D4985 (concentrate).

NOTICE:

- Do not use water or high-silicate automotive-type coolant. This will lead to engine damage or premature engine failure.
- Use only distilled water for mixing coolants. Do not use tap water.

Approved Fuel

Tier 4i Engine (U.S., Canada, EU, and Japan)

⚠WARNING Avoid static electricity when fueling. Ultra Low Sulfur Diesel (ULSD) poses a greater static ignition hazard than earlier diesel formulations. Avoid death or serious injury from fire or explosion. Consult with your fuel system supplier to ensure the delivery system is in compliance with fueling standards for proper grounding and bonding practices.

This engine is designed to run on diesel fuel. Use only high quality fuel meeting ASTM D975 No. 2D, EN590, or equivalent. At temperatures below 32° F (0° C) winter fuel blends are acceptable. See the engine operation manual for more information.

NOTICE: Use only Ultra Low Sulfur Diesel (less than 15 ppm sulfur content) in this unit. Operating with higher sulfur content will damage the engine and aftertreatment device.

Biodiesel blends up to 5% (B5) are approved for use in this unit. The fuel used must meet the specifications for diesel fuel shown above. In certain markets, higher blends may be used if certain steps are taken. Extra attention is needed when using biodiesel, especially when operating in cold weather or storing fuel. Contact your Ditch Witch® dealer or the engine manufacturer for more information.

Tier 3 Engine (Rest of World)

This engine is designed to run on diesel fuel. Use only high quality fuel meeting ASTM D975 No. 2D, EN590, or equivalent. At temperatures below 32° F (0° C) winter fuel blends are acceptable. See the engine operation manual for more information.

IMPORTANT: Worldwide, fuel sulfur regulations vary widely. Fuel used should always comply with local regulations. Prior to shipping, Tier 3 units were filled with Tier 4i DEO. If operating fuel with sulfur content above 15 ppm (15 mg/kg), change oil initially at 250 hours.

Biodiesel blends up to 5% (B5) are approved for use in this unit. The fuel used must meet the specifications for diesel fuel shown above. In certain markets, higher blends may be used if certain steps are taken. Extra attention is needed when using biodiesel, especially when operating in cold weather or storing fuel. Contact your Ditch Witch dealer or the engine manufacturer for more information.

Startup/10 Hour

Location	Task	Notes
DRILLING UNIT	Check track tension and condition	
	Check fuel filter water separator	
	Check engine air filter service indicator	
	Check engine oil level	DEO
	Check fluid pump piston seals	
	Check engine coolant level	DEAC
	Check hydraulic hoses	
	Check hydraulic fluid level	THF
	Check fluid pump oil level	NDO
	Test control switches	
	Check pipe auto lubricator spray nozzle	
	Check pipe auto lubricator TJC level	TJC
	Clean drilling fluid Y-strainer	

Drilling Unit

Check Track Tension and Condition

Check track tension and condition before startup and every 10 hours of operation and adjust or replace as needed.

To Adjust:

1. Pump MPG into fitting (shown) until the length of the compressed spring, dimension (A), is 12.75" (323.85 mm).
2. Drive straight forward one machine length and check tension again.

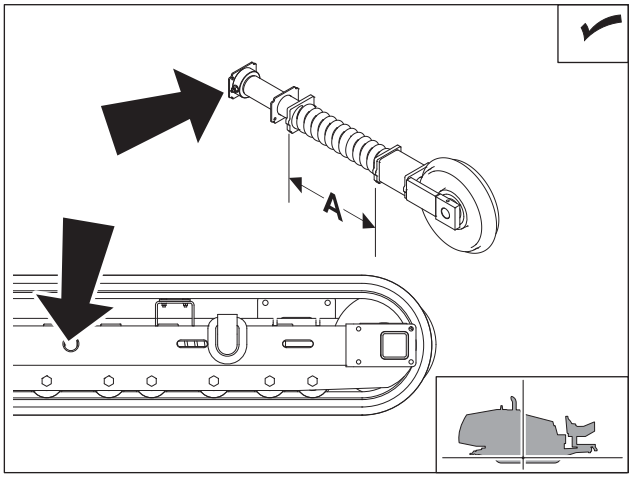

j37om019h.eps

Check Fuel Filter Water Separator

Check fuel filter water separators before startup and every 10 hours of operation. Drain water at plug (shown) as needed.

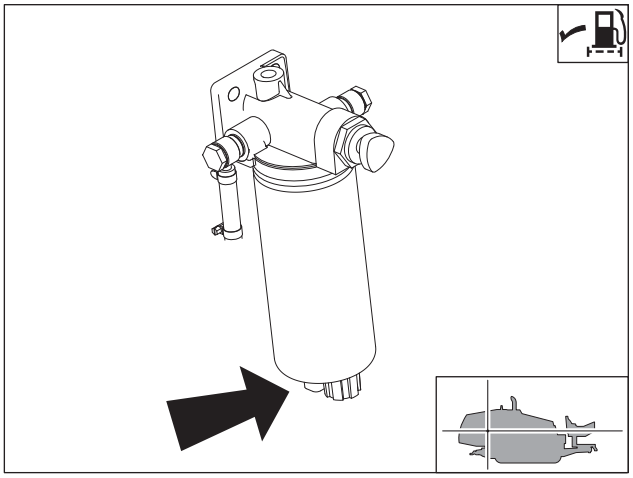
j37om018h.eps

Check Engine Air Filter Service Indicator

Check air filter restriction indicator before startup and every 10 hours of operation. Change air filter elements when air filter restriction indicator reaches the red zone.

NOTICE: Only open the air filter canister when air restriction is indicated. Change the elements. Do not attempt to clean them.

- Compressed air or water may damage filter elements.
- Tapping filter elements to loosen dirt may damage the elements.

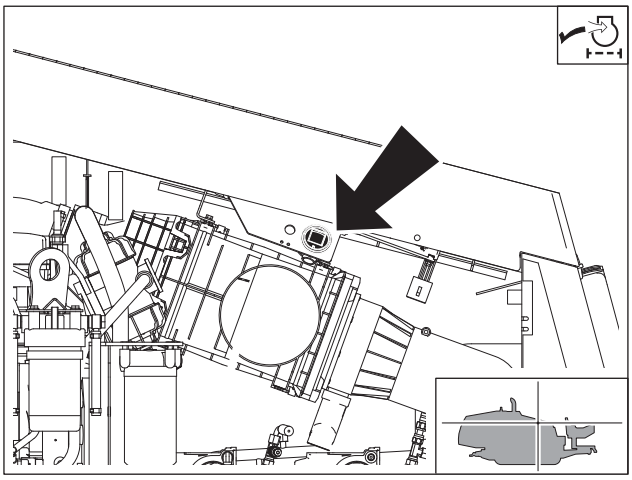
j37om022h.eps

Check Engine Oil Level

Check engine oil at dipstick (1) before startup and every 10 hours of operation. Check with unit on level surface. Add DEO at fill (2) as necessary to keep oil level at highest line on dipstick.

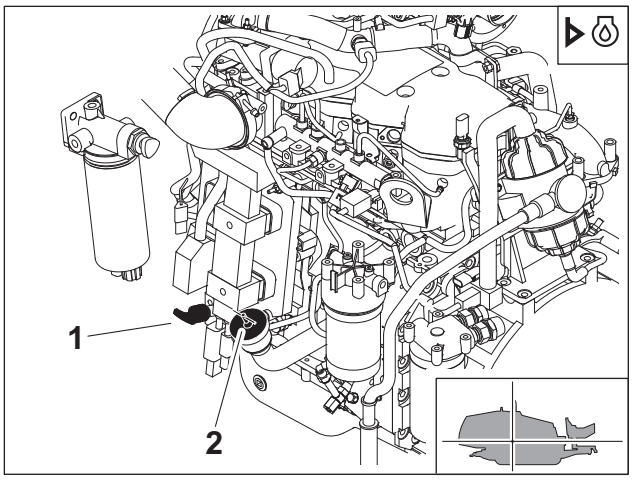

j37om020h.eps

Check Engine Coolant Level

Check coolant level, with engine cool, at sight glass (1) of expansion tank before startup and every 10 hours of operation. Maintain coolant level at halfway point on sight glass. If low, add approved coolant to fill (2).

IMPORTANT: See "Approved Coolant" on page 176 for information on approved coolants.

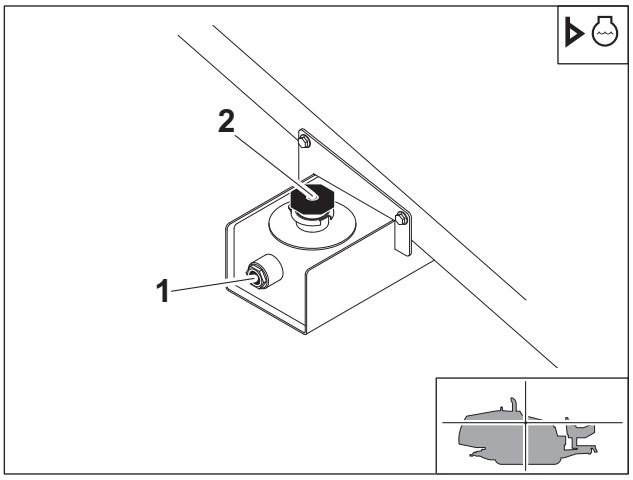

j37om021h.eps

Check Hydraulic Hoses

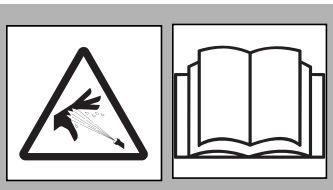

WARNING Pressurized fluid or air could pierce skin and cause severe injury. Refer to operator's manual for proper use. 270-6035

To help avoid injury:

- Use a piece of cardboard or wood, rather than hands, to search for leaks.
- Wear protective clothing, including gloves and eye protection.
- Before disconnecting a hydraulic line, turn engine off and operate all controls to relieve pressure.
- Lower, block, or support any raised component with a hoist.
- Cover connection with heavy cloth and loosen connector nut slightly to relieve residual pressure. Catch all fluid in a container.
- Before using system, check that all connections are tight and all lines are undamaged.
- If you are injured, seek immediate medical attention from a doctor familiar with this type of injury.

Check hydraulic hoses for leaks before startup and every 10 hours of operation.

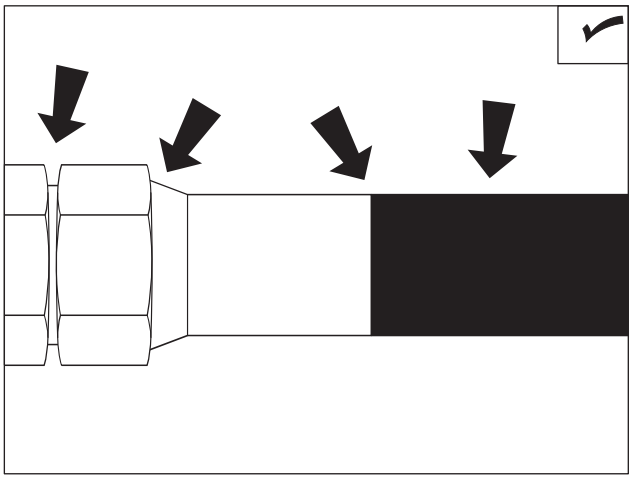

CheckHoses.eps

Check Hydraulic Fluid Level

Check hydraulic fluid level before startup and every 10 hours of operation. Maintain fluid level at halfway point on sight glass (2), when engine is off and fluid is cool. Add THF at hydraulic fluid fill (1).

IMPORTANT: If hydraulic system must be opened for repair, install new filter (p/n 153-791) for first 50 hours of operation. If this filter becomes plugged in fewer than 20 hours, replace with new filter. After 50 hours of normal operation, replace with new filter (p/n 153-792).

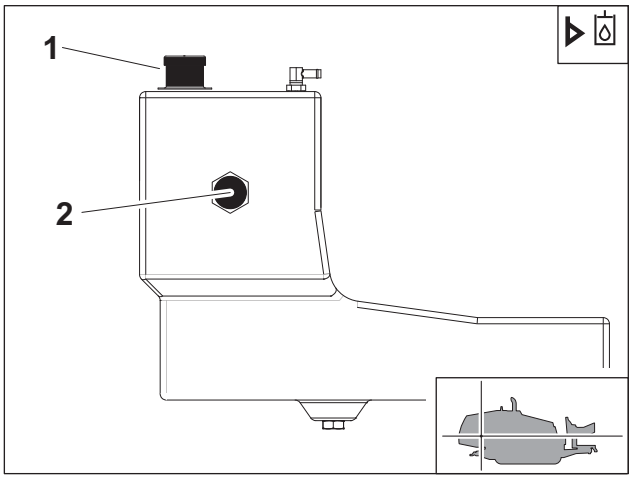

j37om023h.eps

Check Fluid Pump Oil Level

Check fluid pump oil level at sight glass (1) before startup and every 10 hours of operation. Add NDO at fill (2) as needed to maintain level at halfway point on sight glass. Pump holds approximately 5 qt (4.7 L) of NDO.

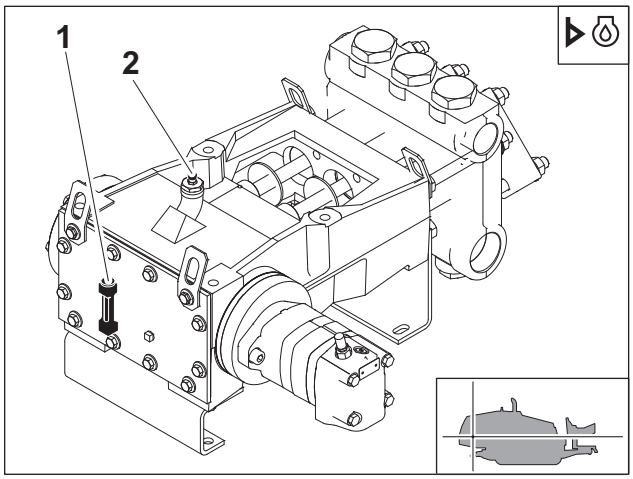

j37om025h.eps

Check Fluid Pump Piston Seals

Check piston seals for signs of excessive leakage before startup and every 10 hours of operation. Replace if leakage becomes excessive. See your Ditch Witch® dealer for replacement parts.

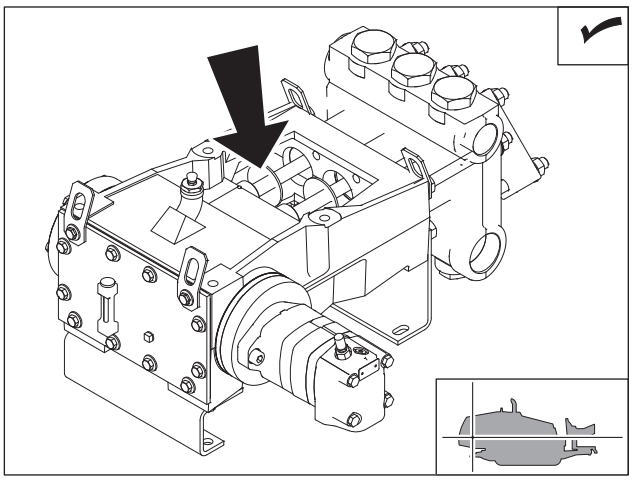

j37om026h.eps

Test Control Switches

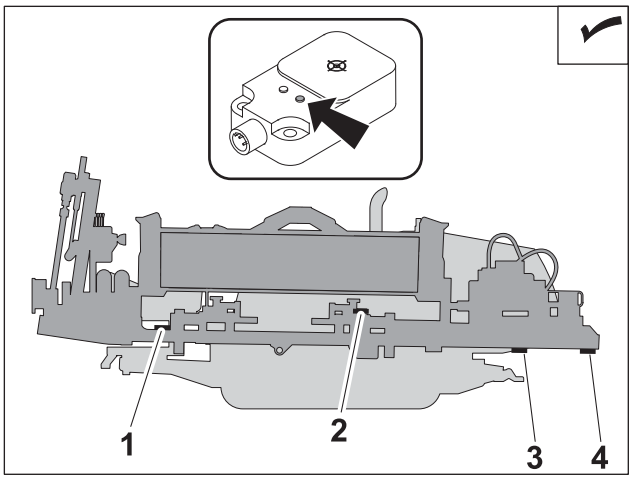

j37om041h.eps

Check control proximity switches before startup and every 10 hours of operation and clean or replace as needed.

1. front home switch
2. shuttle home switch
3. rear home switch
4. rear stop switch

To test:

1. Turn ignition switch to the on position. Do not start engine.
2. Place metal object above target on each switch.
3. If yellow LED on switch lights, switch sensor is working.

Check Pipe Auto Lubricator Spray Nozzle

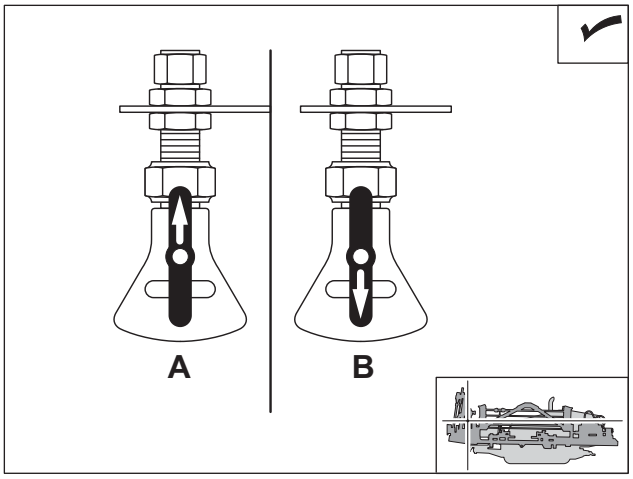

j37om028h.eps

Check pipe auto lubricator spray nozzle before startup and every 10 hours of operation. Ensure that nozzle is free of obstructions and operates properly. Clean as needed.

NOTICE: Ditch Witch® tool joint compound is specially formulated to work with Ditch Witch pipe lubrication system. Use of other tool joint compounds will clog system. See "Recommended Lubricants/Service Key" on page 175 for more information.

To clean:

1. Rotate handle to the upward, or cleanout, position (A).
2. Operate pump until obstruction is flushed.
3. Rotate handle to the downward, or spray, position (B).
4. Clean nozzle guard. If necessary, pull handle/nozzle insert out of housing to clean with fine wire or solvent.

Check Pipe Auto Lubricator TJC Level

Check pipe auto lubricator TJC level before startup and every 10 hours of operation. Change pail as needed. See "Change Auto Lubricator TJC Pail" on page 196 for procedure.

NOTICE: Ditch Witch® tool joint compound is specially formulated to work with Ditch Witch pipe lubrication system. Use of other tool joint compounds will clog system. See "Recommended Lubricants/Service Key" on page 175 for more information.

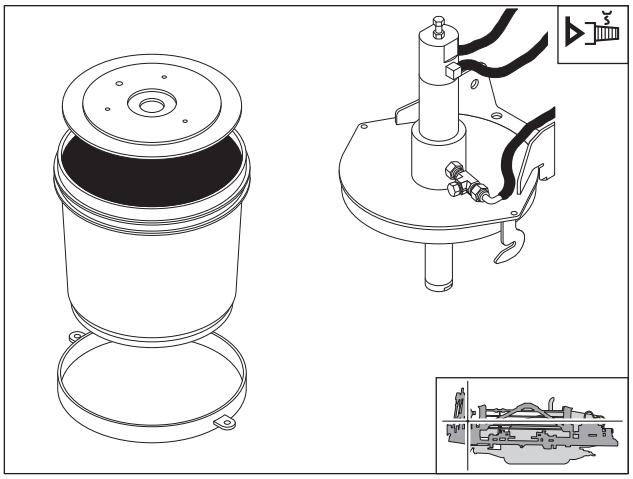

j37om027h.eps

Clean Drilling Fluid Y-Strainer

Clean drilling fluid y-strainer before startup and every 10 hours of operation. Ensure that strainer is free of debris.

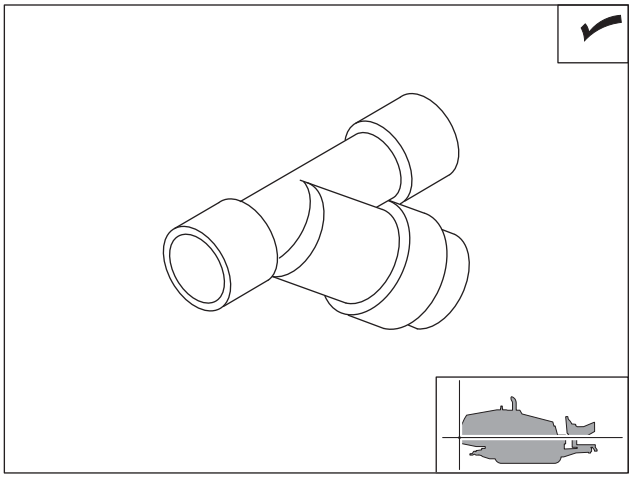

j37om029h.eps

50 Hour

Location	Task	Notes
DRILLING UNIT	Change fluid pump oil	Initial service, NDO
	Check radiator	
	Change hydraulic filters	Initial service
	Check ground drive gearbox oil level	2 gearboxes, MPL
	Check rotation gearbox oil level	MPL
	Inspect thrust rollers	
	Drain water from hydraulic tank	
	Lube SaverLok® collar	
	Check heavy-duty anchor drive gearbox oil level	optional

Drilling Unit

Change Fluid Pump Oil (Initial Service)

Change fluid pump oil at first 50 hours and every 2000 hours thereafter.

To change:

1. Drain at plug (3). Ensure that magnetic drain plug is cleaned of debris before reinstalling.
2. Add NDO at fill plug (2). Maintain fluid level at fill plug (2). Inspect oil level at sight glass (1).

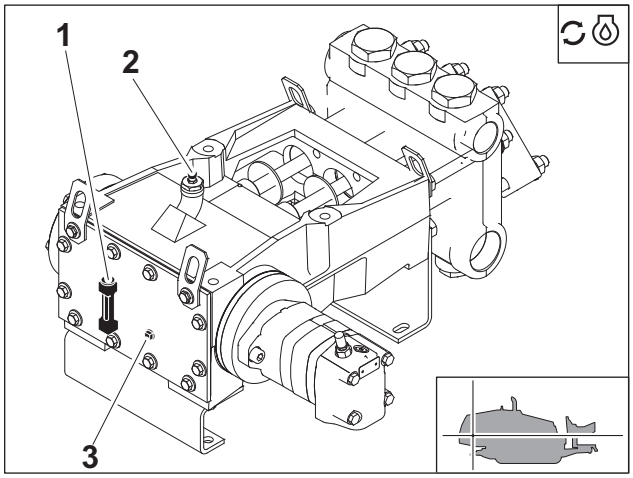

j37om024h.eps

Check Radiator

Check radiator for dirt, grass, and other debris every 50 hours. Check more often if operating in dusty or grassy conditions. Clean as needed.

To clean:

- Clean fins with compressed air or spray wash.
- Open rear hood and spray through radiator toward engine.
- If grease and oil are present on radiator, spray with solvent and allow to soak overnight.

IMPORTANT: Be careful not to damage fins with high pressure air or water.

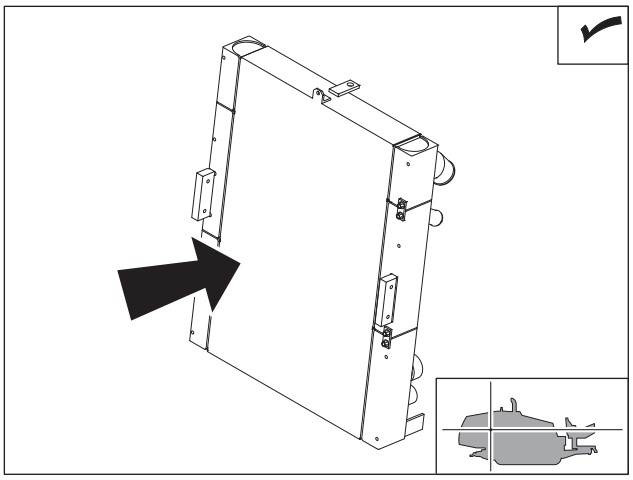

j37om030h.eps

Change Hydraulic Filters (Initial Service)

Change hydraulic filter after first 50 hours. Replace filter every 500 hours thereafter. Change filter more often if indicated by filter indicator.

IMPORTANT: If hydraulic system must be opened for repair, install new filter (p/n 153-791) for first 50 hours of operation. If this filter becomes plugged in fewer than 20 hours, replace with new filter. After 50 hours of normal operation, replace with new filter (p/n 153-792).

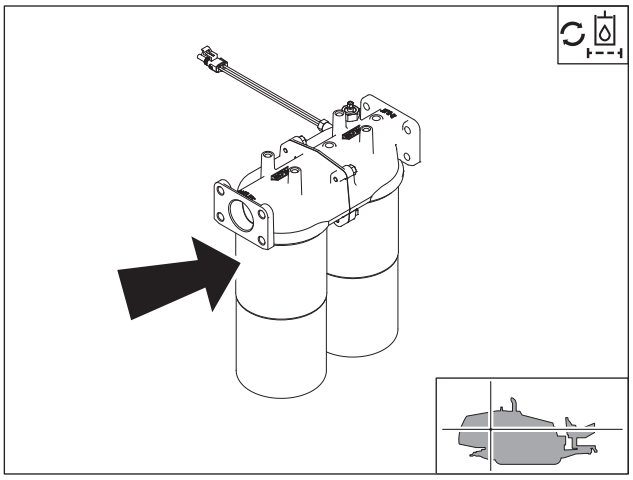

j37om031h.eps

Check Ground Drive Gearbox Oil Level

Check oil level in both ground drive gearboxes every 50 hours. Rotate plug (shown) until level with center of gearbox. Open plug. If oil does not come out, add MPL as needed. Never fill more than halfway.

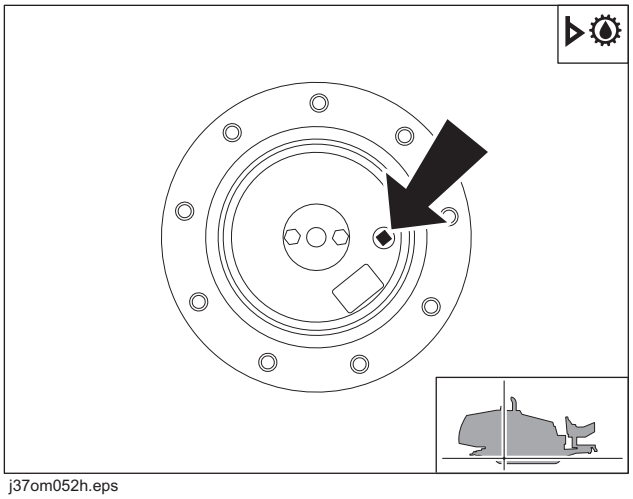

j37om052h.eps

Check Rotation Gearbox Oil Level

IMPORTANT: Drill frame must be level for accurate reading.

Check rotation gearbox oil level every 50 hours.

Add MPL through plug (1) to level of sight plug (2) as needed.

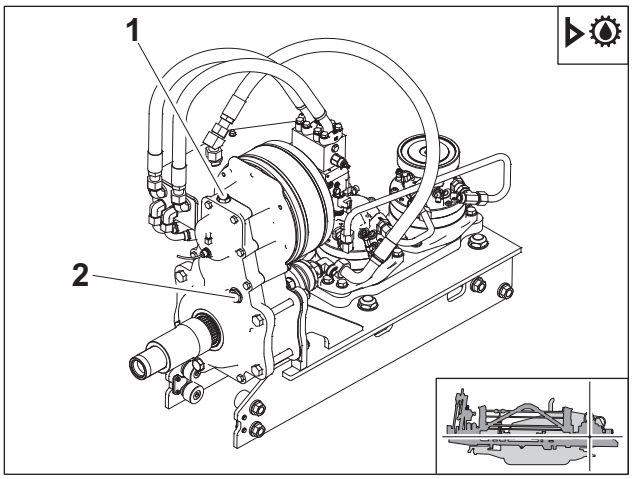

j37om042h.eps

Inspect Thrust Rollers

Inspect thrust rollers (at each end of carriage) every 50 hours. Clean or replace if they do not turn freely.

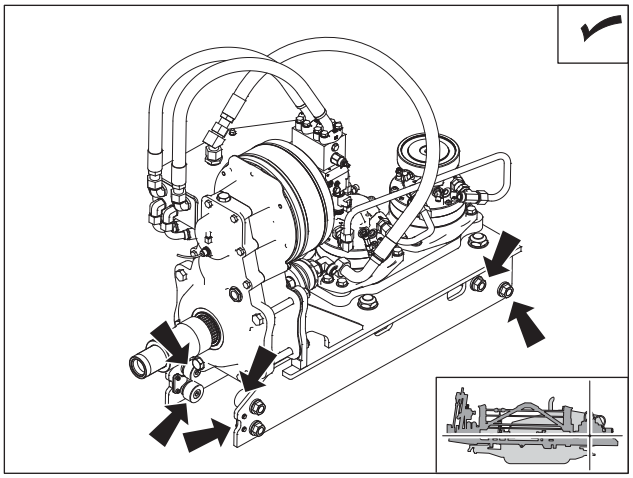

j37om045h.eps

Drain Water from Hydraulic Tank

Drain water out of tank every 50 hours if using environment friendly hydraulic fluid. To drain, turn plug (shown) slightly until water comes out. After all water has drained, tighten plug.

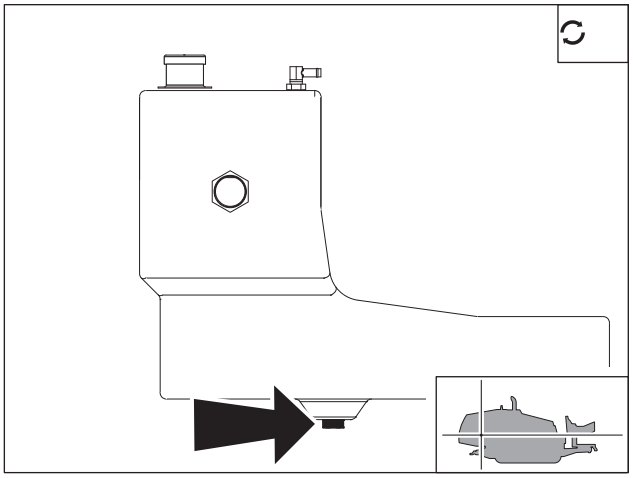

j37om032h.eps

Lube SaverLok® Collar

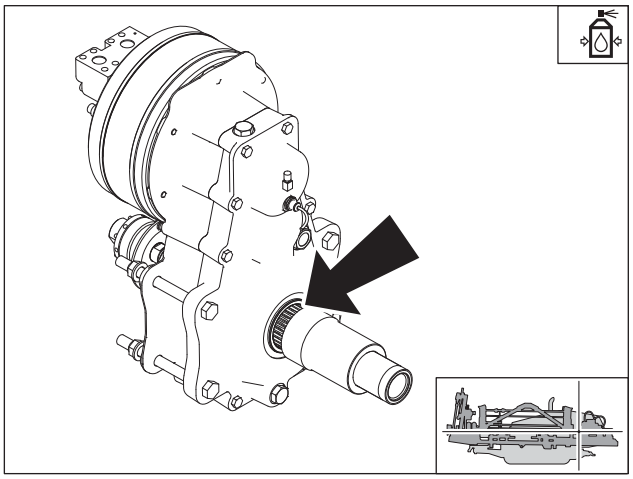

j37om070h.eps

Lube SaverLok collar with EPS every 50 hours.

To lube:

- Stop engine and turn battery disconnect switch to the off position.
- Clean exposed portion of sliding output shaft with pressure washer to remove grime.
- Blow dry with compressed air.
- Apply EPS spray lube to all exposed shaft surfaces while manually moving the shaft in and out.
- Turn battery disconnect switch to the on position.

Check Heavy-Duty Anchor Driver Gearbox Oil Level (Optional)

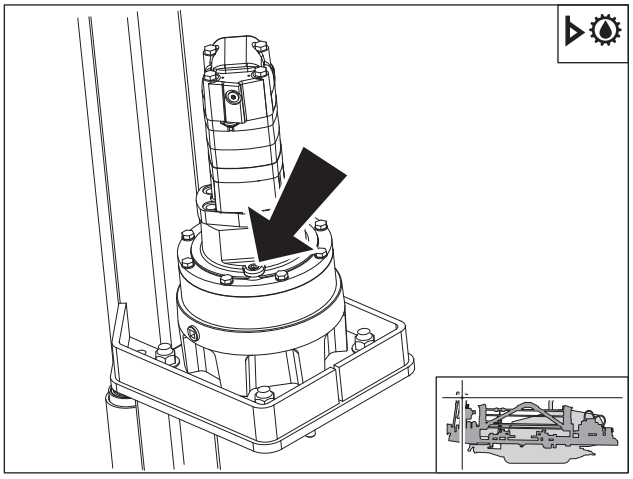

j37om058h.eps

Check heavy-duty anchor driver gearboxes oil level at fill plug (shown) every 50 hours. Add MPL at fill as needed.

IMPORTANT: Gearbox must be level for accurate reading.

250 Hour

Location	Task	Notes
DRILLING UNIT	Inspect air intake system	
	Tier 3: Change engine oil, initial	Only applies to units with Tier 3 engines operating with high sulfur fuel (sulfur content >15 ppm).

Drilling Unit

Inspect Air Intake System

Inspect intake piping for cracked hoses, loose clamps, or punctures. Tighten or replace parts as necessary.

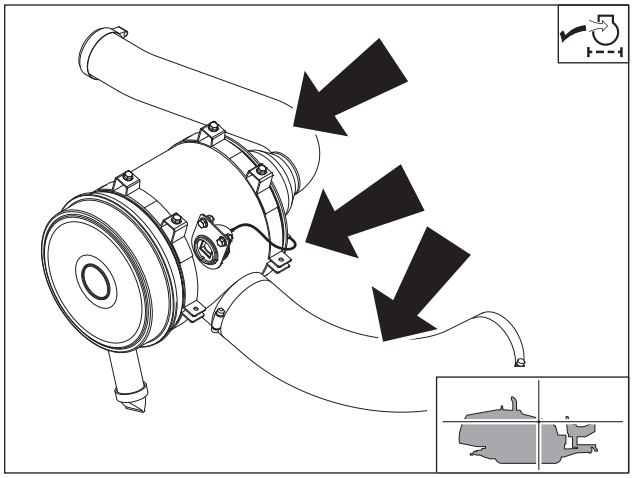

j37om055h.eps

Change Engine Oil and Filter (Tier 3)

NOTICE: Units are initially filled with Tier 4i DEO engine oil. If operating with high sulfur fuel (greater than15 ppm sulfur, found oust i de of US, Canada, EU and Japan), change oil initially at 250 hours.

Drain oil (3), change filter (4), and add 11.5 qt (10.9 L) of Tier 3 DEO at fill (2). Check oil level at dipstick (1).

IMPORTANT: Use oil specified in temperature chart found in "Recommended Lubricants/ Service Key" on page 175.

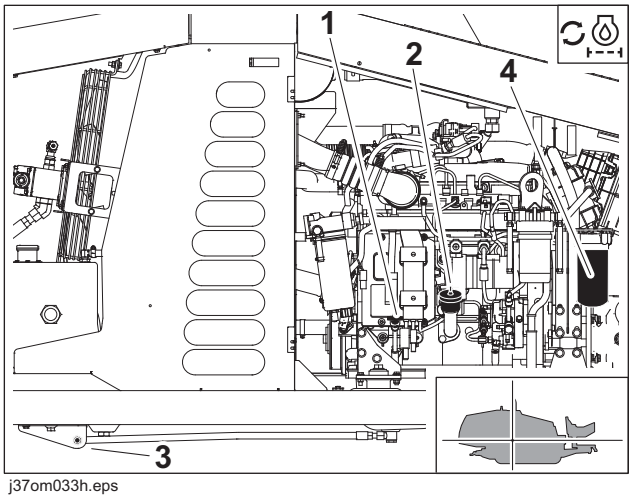

j37om033h.eps

500 Hour

Location	Task	Notes
DRILLING UNIT	Change engine oil and filter	DEO
	Change hydraulic filters	Normal conditions
	Change fuel filters	

Drilling Unit

Change Engine Oil and Filter

NOTICE: Incorrect fuel and oil combinations can damage engine.

- Tier 4i: Use Tier 4i DEO and ULSD. Change oil every 500 hours. DO NOT use high sulfur fuel (greater than 15 ppm).
- Tier 3: If using Tier 3 DEO, change oil every 500 hours.

IMPORTANT: See "Recommended Lubricants/ Service Key" on page 175.

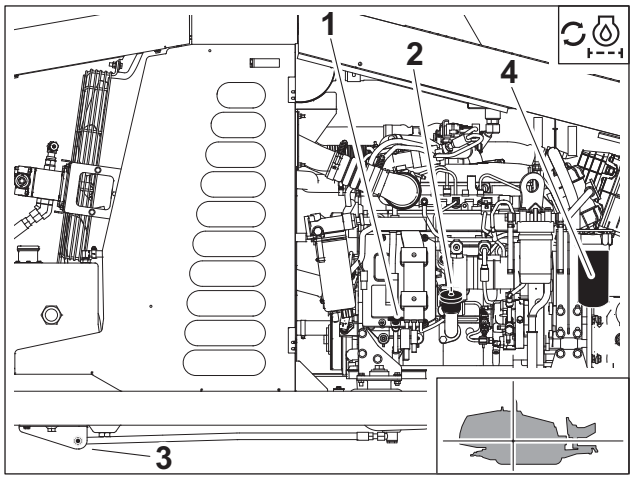

j37om033h.eps

Drain oil (3), change filter (4), and add 11.5 qt (10.9 L) of DEO at fill (2). Check oil level at dipstick (1).

Change Hydraulic Filters (Normal Conditions)

Change hydraulic filter every 500 hours. Change filter more often if indicated by filter indicator.

IMPORTANT: If hydraulic system must be opened for repair, install new filter (p/n 153-791) for first 50 hours of operation. If this filter becomes plugged in fewer than 20 hours, replace with new filter. After 50 hours of normal operation, replace with new filter (p/n 153-792).

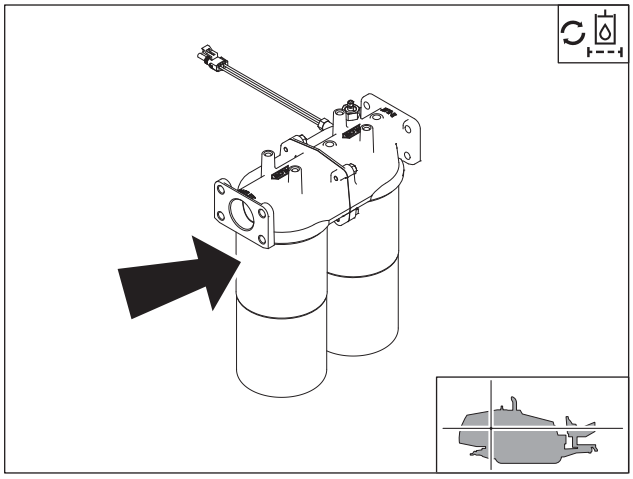
j37om031h.eps

Change Fuel Filters

Replace fuel filters every 500 hours. See parts manual or contact your Ditch Witch® dealer for correct replacement filter.

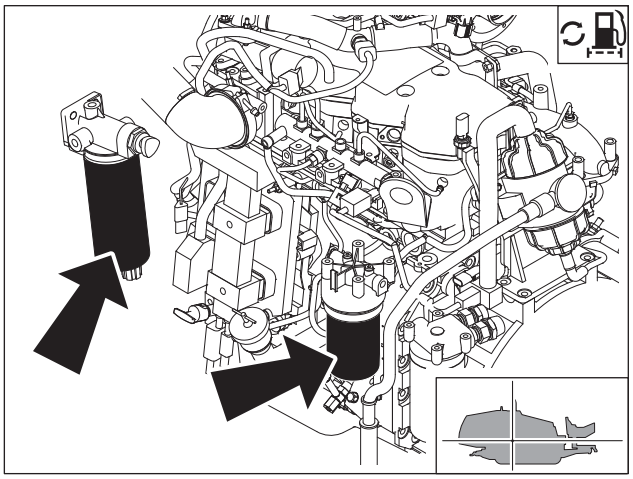

j37om034h.eps

1000 Hour

Location	Task	Notes
DRILLING UNIT	Change hydraulic fluid and filters	THF
	Change ground drive gearbox oil	2 gearboxes, MPL
	Change rotation gearbox oil	MPL
	Lube SaverLok® connection	EPG
	Change heavy-duty anchor gearbox oil	2 gearboxes, MPL

Drilling Unit

Change Hydraulic Fluid and Filters

Change hydraulic fluid and filters every 1000 hours.

To change:

1. Drain hydraulic fluid at drain (3).
2. Change hydraulic filters. See "Change Hydraulic Filters (Normal Conditions)" on page 190.
3. Add THF at fill (1) until level is at halfway point on sight glass (2)..

IMPORTANT: Change oil and filter every 500 hours if jobsite temperature exceeds 100°F (38°C) more than 50% of the time.

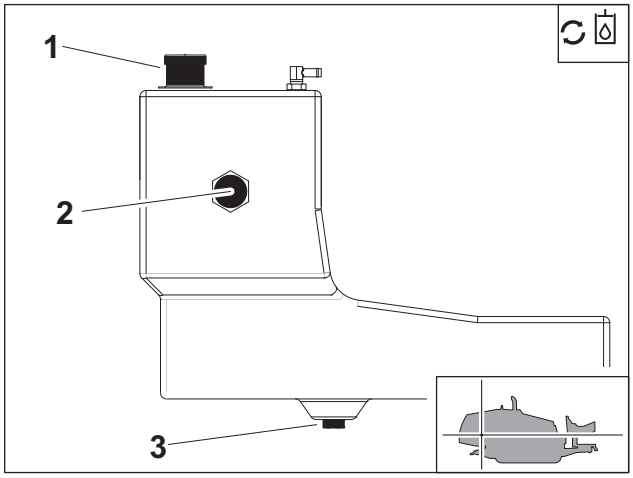

j37om054h.eps

Change Ground Drive Gearbox Oil

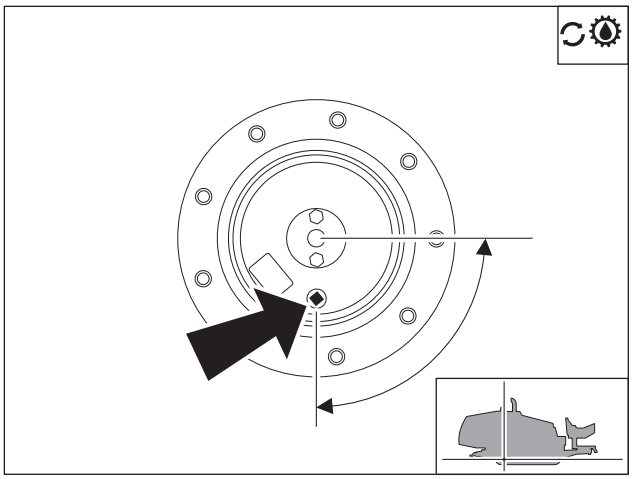
j37om053h.eps

Change oil in both ground drive gearboxes every 1000 hours.

To change:

1. Drain oil at plug (shown).
2. Rotate gearbox 90° and add MPL at fill plug.

IMPORTANT:

- Drill frame must be parked on level surface for accurate reading.
- Use helper to assist in positioning gearbox plugs for checking and adding oil.
- Do not overfill.

3. Replace fill plug.

Lube SaverLok® Connection

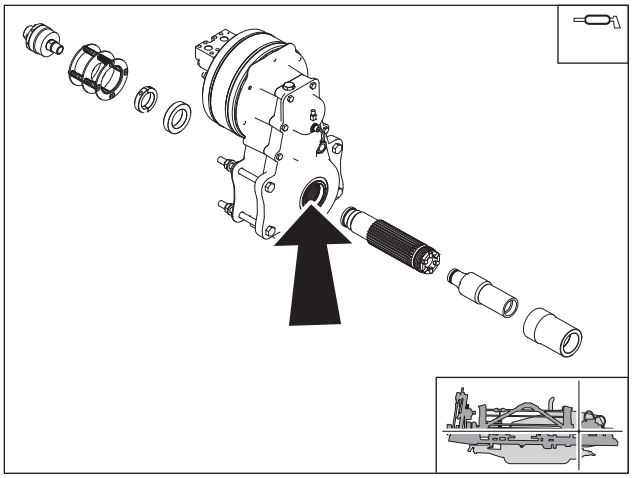
j37om071h.eps

Remove water swivel and disassemble SaverLok System®. Lube SaverLok connection with EPG every 1000 hours.

To lube:

- Stop engine and turn battery disconnect switch to the off position.
- Clean exposed portion of sliding output shaft with pressure washer to remove grime.
- Blow dry with compressed air.
- Apply EPG to all exposed shaft surfaces while manually moving the shaft in and out.
- Turn battery disconnect switch to the on position.

Change Heavy-Duty Anchor Gearbox Oil (Optional)

Change heavy-duty anchor gearbox oil every 1000 hours. Capacity is 26 oz (0.77 L) MPL per gearbox.

To Change:

1. Ensure that gearbox is level.
2. Drain oil at gearbox oil drain (1). Replace drain plug.
3. Fill gearbox with MPL at fill plug (2).

IMPORTANT: Gearbox must be level for accurate reading.

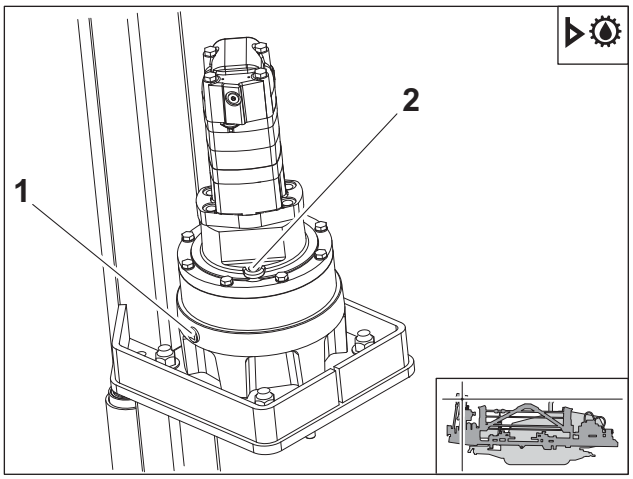

j37om059h.eps

Change Rotation Gearbox Oil

IMPORTANT: Gearbox must be level for accurate reading.

Drain oil at gearbox oil drain (3) every 1000 hours. Replace drain plug. Add MPL at fill (1). Check level at sight glass (2). Replace fill plug.

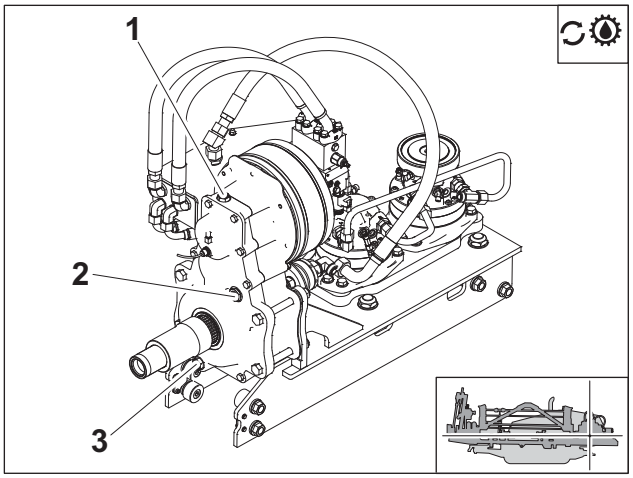

j37om043h.eps

2000 Hour

Location	Task	Notes
DRILLING UNIT	Change engine coolant	DEAC
	Change fluid pump oil	NDO

Drilling Unit

Change Engine Coolant

Drain cooling system at drain (1) every two years or 2000 hours. Add approved coolant according to instructions below. Refill capacity is 23 qt (21.8 L).

NOTICE:

- The use of non-approved coolant may lead to engine damage or premature engine failure and will void engine warranty.
- See "Approved Coolant" on page 176 for list of approved coolants.
- Use only distilled water for mixing coolants. Do not use tap water.

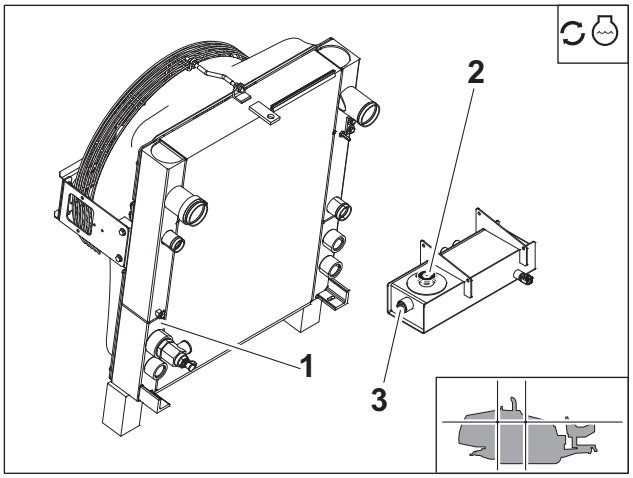

j37om036h.eps

To fill:

1. Add coolant at radiator fill (2) at a rate of 3 gpm (11.4 L/min) or less until full.
2. Run engine with thermostat open (>195°F/90°C engine temperature) for several minutes.
3. Stop engine and let it cool.
4. Maintain coolant level at halfway point on sight glass (3).

Change Fluid Pump Oil

Change fluid pump oil every 2000 hours.

To change:

1. Drain at plug (3). Ensure that magnetic drain plug is cleaned of debris before reinstalling.
2. Add NDO at fill plug (2). Maintain fluid level at fill plug (2). Inspect oil level at sight glass (1).

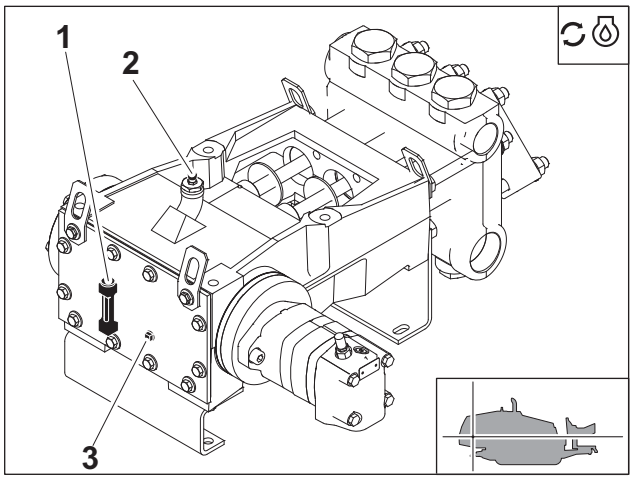

j37om024h.eps

As Needed

Location	Task	Notes
DRILLING UNIT	Change pipe auto lubricator TJC pail	TJC
	Change hydraulic filter	Any time system is opened
	Check pipeloader inserts	
	Check pipe guide inserts	
	Check fluid pump ball valve	
	Check track support slide pads	
	Check wrench jaw inserts	
	Change engine drive belt	
	Change air filter	
	Replace SaverLok® body	
	Check batteries	
	Charge battery	

Drilling Unit

Change Auto Lubricator TJC Pail

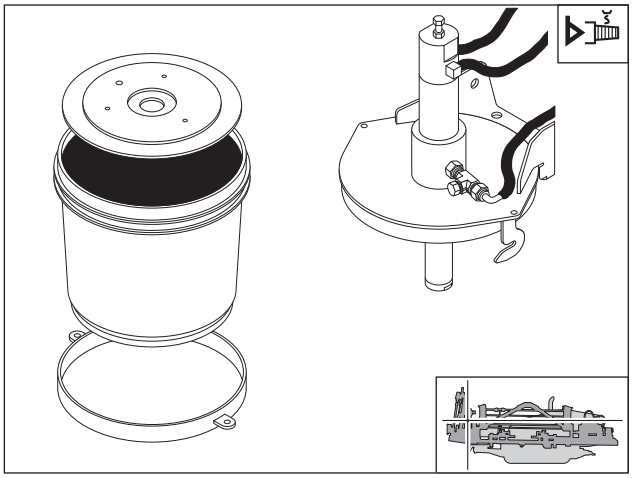
j37om027h.eps

Check pipe auto lubricator TJC level and change pail as needed.

To change pail:

1. Remove wingnuts and bolts attaching base ring to pail cover.
2. Rotate base ring slightly to clear hooks on cover and remove pail from cover.
3. Remove follower plate from empty pail and install into new pail. Press firmly on follower plate until TJC comes up in center opening.
4. Remove base ring from empty pail and install onto new pail.
5. Install pail into place over pump dip tube. Use hooks on cover to support base ring.
6. Install bolts and wingnuts.
7. Remove cap from discharge tee on pump. Operate pump until discharged TJC is free of air pockets. Replace cap.

NOTICE: Use only genuine Ditch Witch® tool joint compound to maintain warranty. See "Recommended Lubricants/Service Key" on page 175 for more information.

Change Hydraulic Filter (Anytime System Opened)

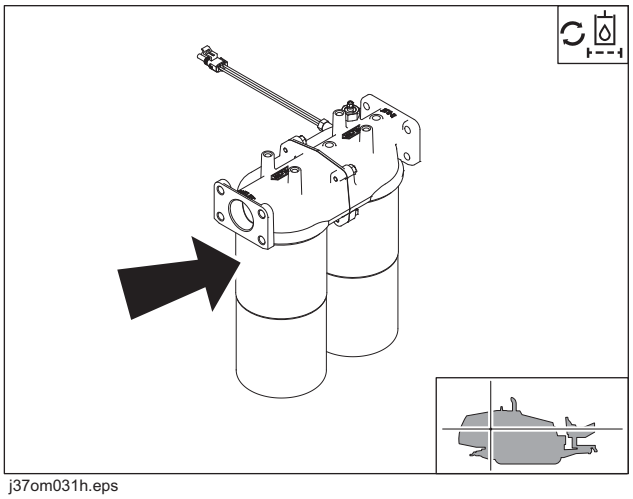
j37om031h.eps

Change hydraulic filter anytime system is opened for repair. Change filter and add THF as needed at hydraulic fluid fill.

Check Pipeloader Inserts

Check pipeloader inserts at indicated areas for wear. Flip gripper inserts for longer wear, or replace as needed. See your Ditch Witch® dealer for replacement parts.

1. Shuttle gripper pad
2. Wear pad
3. Slide pad

IMPORTANT: Ensure bolts are tightened evenly to enable inserts to slide freely and wear evenly.

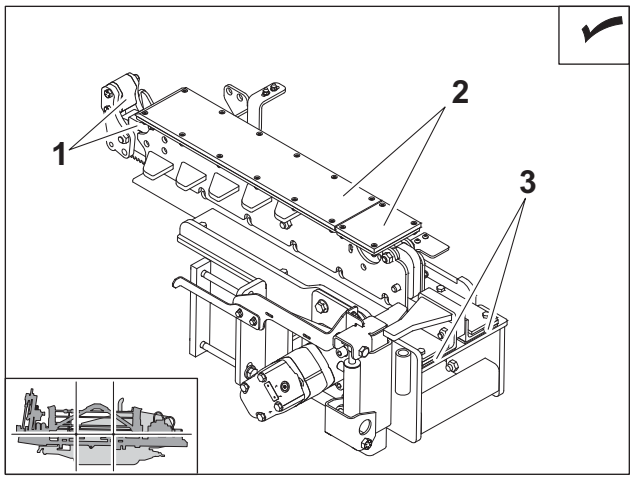

j37om040h.eps

Check Pipe Guide Inserts

Check pipe guide inserts (2, 4) for wear. Rotate inserts for longer wear, or replace as needed. See your Ditch Witch dealer for replacement parts.

To replace:

1. Remove lynch pins (1) and open pipe guide.
2. Remove guide inserts (2).
3. Remove lynch pins (3) and open pipe guide.
4. Remove guide inserts (4).
5. Replace in reverse order.

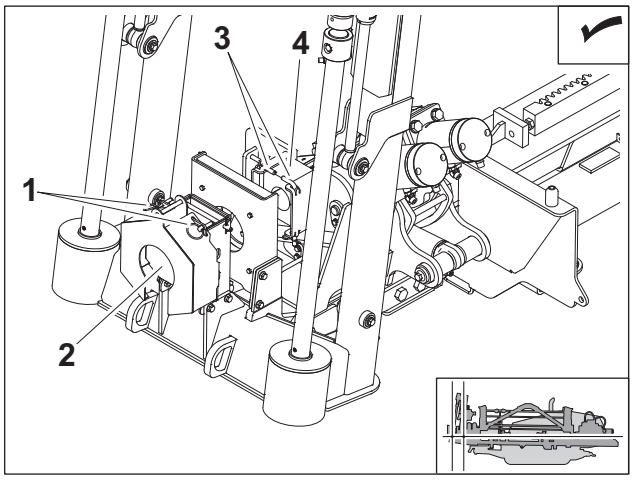

j37om046h.eps

Check Fluid Pump Ball Valve

Check ball valve for leaks. Tighten stem packing as needed. See your Ditch Witch dealer for replacement packing.

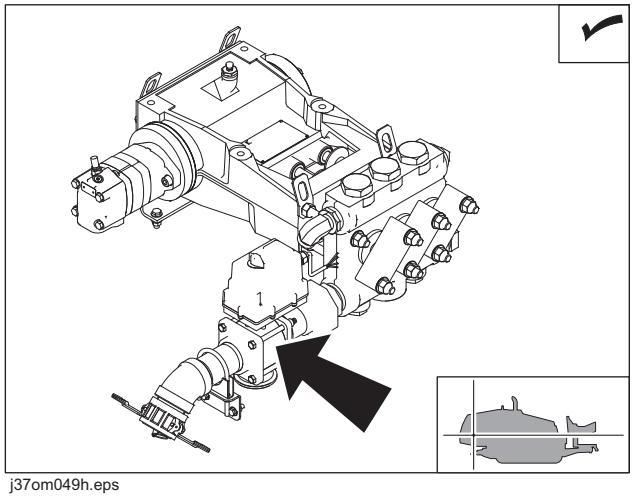

j37om049h.eps

Check Track Support Slide Pads

Check track support slide pads. Replace as needed. See your Ditch Witch® dealer for replacement parts.

Check Wrench Jaw Inserts

Check wrench jaw inserts for wear and replace as needed.

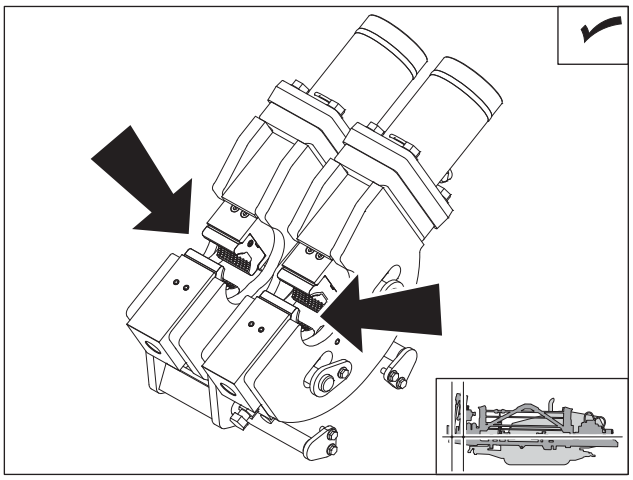

j37om048h.eps

Change Engine Drive Belt

Change engine drive belt as needed.

1. Turn off engine and remove key.
2. Use a 1/2" drive rachet at pulley (1) to remove tension.
3. Remove belt (2).
4. Install new belt.

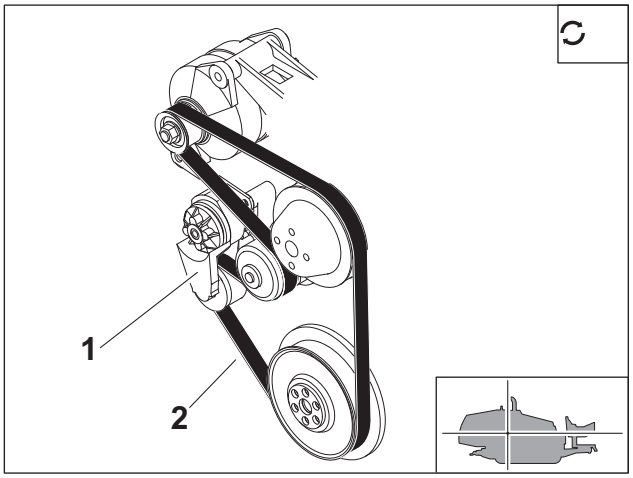

j37om037h.eps

Change Air Filter

Change air filter when air filter service indicator (3) reaches the red zone.

NOTICE: Only open the air filter canister when air restriction is indicated. Change the elements, do not attempt to clean them.

- Compressed air or water may damage filter elements.
- Tapping filter elements to loosen dirt may damage the elements.

To change Tier 3 air filter:

1. Disengage clasps and remove cover.
2. Remove primary element (1) and secondary element (2).
3. Wipe inside of housing and wash cover and dust ejector slit (4).
4. Install new element(s).
5. Install cover and engage clasps.
6. Reset air filter service indicator (3).

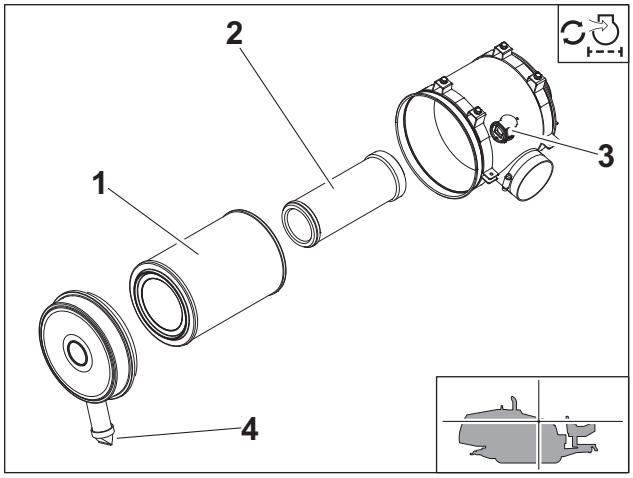

j37om038h.eps

To change Tier 4i air filter:

1. Disengage clasps and remove cover.
2. Remove primary element and secondary element.
3. Wipe inside of housing and wash cover and dust ejector slit.
4. Install new element(s).
5. Install cover and engage clasps.
6. Reset air filter service indicator.

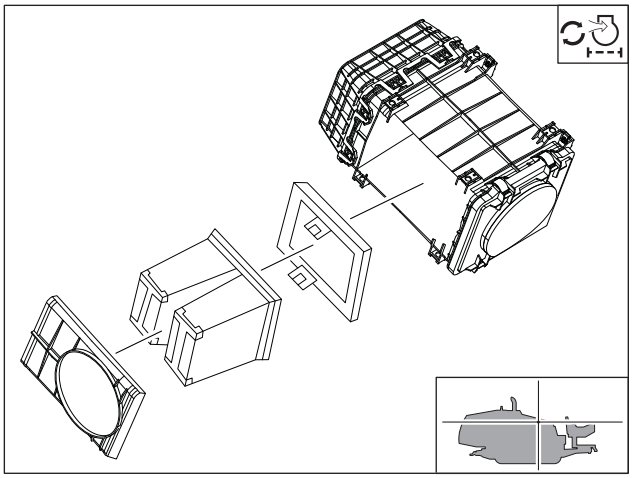
j37om038h.eps

Replace SaverLok® Body

Replace SaverLok body (2) as needed. See your Ditch Witch® dealer for replacement parts.

To remove:

1. Clean front wrench of all pipe and tooling.
2. Close front wrench.
3. Position the carriage so that the saverLok collar (3) can be clamped into the rear wrench.

> ***NOTICE:*** Clamping front wrench on SaverLok nose will damage the threads and impede disassembly.

4. Clamp rear wrench on SaverLok collar.

> **IMPORTANT:** Unit may not build enough torque to break out the SaverLok body unless both wrenches are closed.

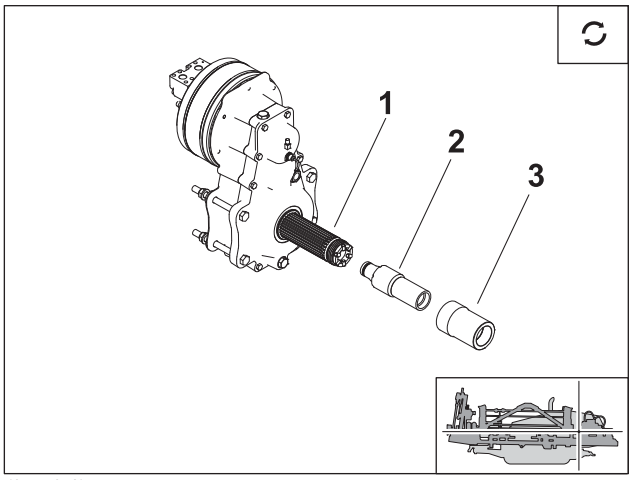

j37om072h.eps

5. Rotate spindle counterclockwise to unthread collar. Remove collar from system and set aside for later use.
6. Remove SaverLok body from SaverLok connection (1).
   - If parts are clean and dry, pull SaverLok body free of SaverLok connection by hand.
   - If the parts are not clean and dry, reposition carriage to clamp SaverLok body in rear wrench and thrust carriage back to pull SaverLok body free from connection.
7. Turn off engine.

To install:

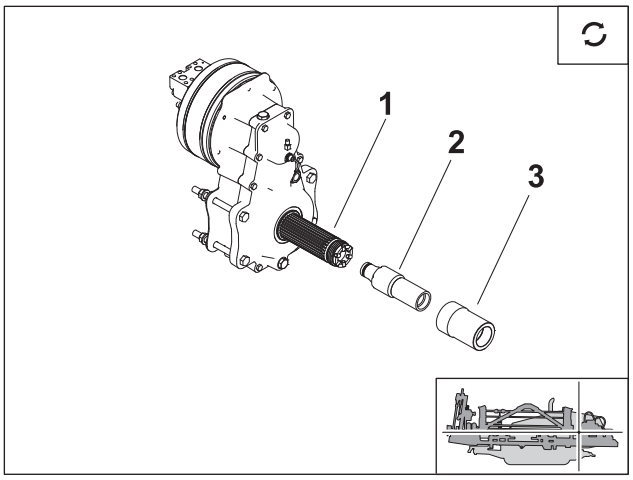

j37om072h.eps

1. Inspect SaverLok® connection (1) for damage. Coat threads with clean TJC.
2. Coat SaverLok shoulder (2) and SaverLok collar (3) threads and shoulder with clean TJC.
3. Apply grease or lubricant to the SaverLok o-ring and insert SaverLok body into SaverLok connection. The connection will not lock fully into place.
4. Thread SaverLok body into connection until o-ring is fully engaged using one of the following methods:
   - Slide SaverLok collar over SaverLok body and engage threads by hand. Once the SaverLok collar is hand tight (bottomed out), remove collar.
   - Tap the SaverLok nose with a rubber mallet until the o-ring is fully engaged.
5. Position SaverLok body by hand for proper engagement of pins and grooves.
6. Slide SaverLok collar over SaverLok body and hand-tighten the threads (typically 3-4 turns).
7. Start unit and position carriage so that collar can be clamped in the rear wrenches.
8. Clamp wrench on collar and tighten SaverLok assembly to a rotation pressure gauge reading between 4350-5800 psi (300-400 bar). This is equivalent to 3000-4000 ft•lb (2212-2950 N•m) of torque.
9. Immediately loosen the collar and repeat the tighten/loosen process five times to break in the contact surfaces.
10. Tighten SaverLok assembly to a rotation pressure gauge reading between 4350-5800 psi (300-400 bar) to finish the installation.

Check Batteries

Check batteries as needed. Keep batteries clean and terminals free of corrosion.

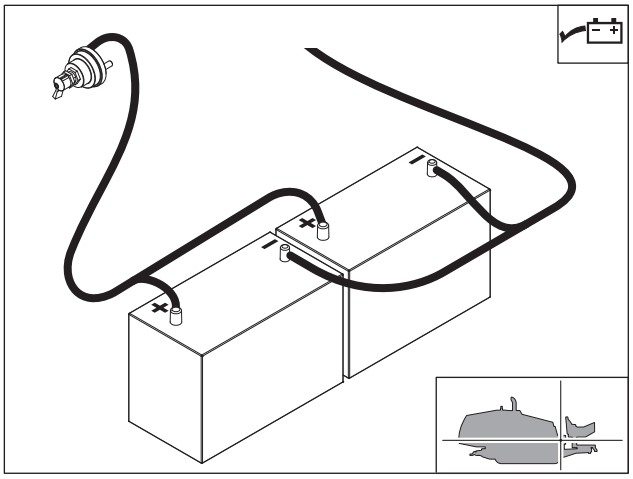
j37om035h.eps

To clean:

1. Turn battery disconnect switch, if equipped, to the off position.
2. Ensure that no ignition sources are near batteries.
3. Loosen and remove battery cable clamps carefully, **negative (-)** cable first.
4. Clean cable clamps and terminals to remove dull glaze.
5. Check for signs of internal corrosion in cables.
6. Apply MPG to terminals after cleaning to reduce corrosion.

7. Connect battery cable clamps, **positive (+)** cable first.
8. Tighten any loose connections.
9. Ensure that battery tiedowns are secure.
10. Turn battery disconnect switch to the on position.

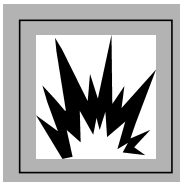

⚠WARNING Explosion possible. Serious injury or equipment damage could occur. Follow directions carefully.

To help avoid injury: Do not create sparks and do not short across battery terminals for any reason.

Charge Battery

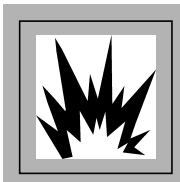

⚠WARNING Explosion possible. Serious injury or equipment damage could occur. Follow directions carefully.

To help avoid injury:

- Use a single 12V maximum source for charging. Do not connect to rapid chargers or dual batteries.
- Use caution and wear personal protective equipment such as safety eyewear, when charging or cleaning battery.
- Keep sparks, flames, and any ignition source away from batteries at all times. Internal contents are extremely hazardous. Leaking fluid is corrosive. Battery may be explosive at higher temperatures.
- NEVER lean over battery when making connections.
- Do not allow vehicles to touch when charging.
- Do not attempt to charge a battery that is leaking, bulging, heavily corroded, frozen, or otherwise damaged.
- NEVER short-circuit battery terminals for any reason or strike battery posts or cable terminals.
- Refer to MSDS for additional information regarding this battery.

Before You Start

Electronic components can be easily damaged by electrical surges. Jump starting can damage electronics and electrical systems, and is not recommended. Try to charge the battery instead. Use quality large diameter jumper cables capable of carrying high currents (400 amps or more). Cheap cables may not allow enough current flow to charge a dead/discharged battery.

Read all steps thoroughly and review illustration before performing procedure.

Charging Procedure (Engine Off)

1. Park service vehicle close to disabled equipment but do not allow vehicles to touch. Engage parking brake in both vehicles.
2. Turn the ignition switch to the OFF position in both vehicles, and turn off all electrical loads. Disconnect the machine controller.

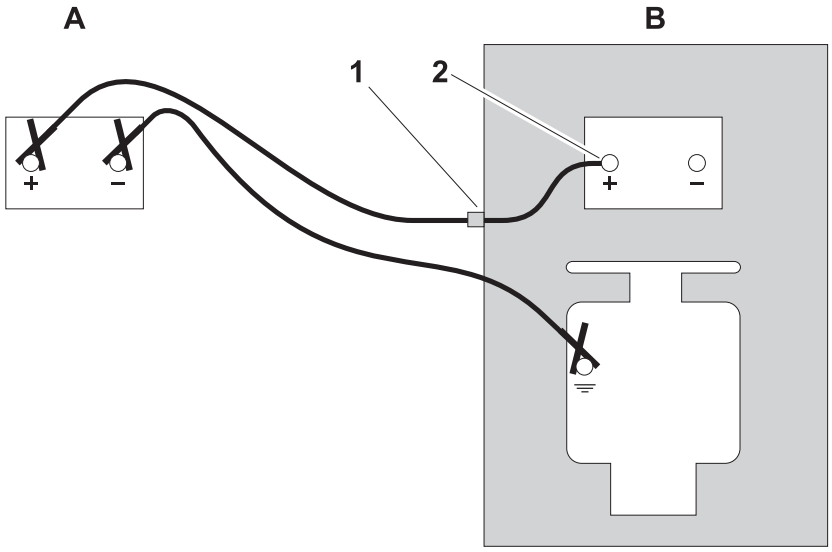

3. Inspect battery in disabled vehicle (B) for signs of cracking, bulging, leaking, or other damage. Connect red positive (+) jumper cable clamp to positive (+) post (2) of battery in disabled vehicle first.

IMPORTANT: Some equipment may have a positive jumper cable terminal (1) located externally. If so equipped, connect red positive (+) jumper cable clamp to terminal.

4. Connect the other red positive (+) jumper cable clamp to positive (+) post of battery (A) in the service vehicle.
5. Connect black negative (-) cable clamp to negative (-) post of battery (A) in service vehicle.
6. Connect the other black negative (-) cable clamp to the engine or frame ground on the disabled vehicle, at least 12" (305 mm) from the failed battery, as shown.
7. Operate service vehicle engine at 1500-2000 rpm for a few minutes to build an electrical charge in the failed battery.
8. Stop engine in service vehicle.
9. Remove jumper cables from the service vehicle, black negative (-) clamp first. Do not allow clamps to touch.
10. Remove black negative (-) cable clamp from the disabled engine or frame ground first.
11. Remove red positive (+) cable clamp from the disabled vehicle positive (+) battery post last.
12. Reconnect machine controller and try to start disabled vehicle.

If the disabled vehicle did not start, check for loose or corroded battery cable connections. Poor connections will prevent current from charging the failed battery. Clean terminals and posts if necessary and repeat steps above.

Specifications

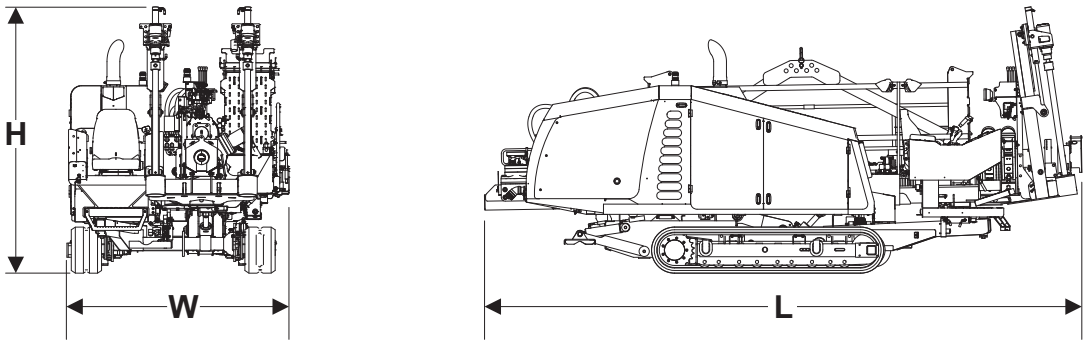

j37om039h.eps

Dimensions		U.S.	Metric
L, overall machine length			
	driving (per SAE J2022)	234.5 in	5.96 m
	transport (per SAE J2022)	232.5 in	5.90 m
W, overall machine width			
	base width (per SAE J2022)	87 in	2.21 m
	width with cab (per SAE J2022)	87 in	2.21 m
H, overall machine height			
	driving (per SAE J2022)	101 in	2.56 m
	transport (per SAE J2022)	93 in	2.36 m
	transport with cab (per SAE J2022)	99.5 in	2.53 m
Operating mass (per SAE J2022)		20,200 lb	9163 kg
Operating mass with cab (per SAE J2022)		20,800 lb	9435 kg
Entry angle (per SAE J2022)		9-20°	9-20°
Entry angle, with tracks on ground (per SAE J2022)		9-17°	9-17°
Angle of approach		19°	19°
Angle of approach with cab		19°	19°
Angle of departure		19°	19°
Ground bearing pressure with Ditch Witch® pipe (ISO 16754)		10.3 psi	0.71 kg/cm^2
Ground bearing pressure with Ditch Witch pipe, with cab (ISO 16754)		10.6 psi	0.73 kg/cm^2
Ground clearance (ISO 16754)		5.7 in	144 mm

Power Pipe®	**U.S.**	**Metric**
Length (per SAE J2022), nominal	118 in	3.00 m
Joint diameter (per SAE J2022)	3.00 in	76 mm
Tubing diameter (per SAE J2022)	2.38 in	60 mm
Minimum bend radius	155 ft	47 m
Weight (per SAE J2022), lined	90 lb	41 kg
Weight of drill pipe and large box (50 pipe)	5200 lb	2358 kg
Weight of drill pipe and small box (25 pipe)	2700 lb	1225 kg

Power Pipe® Forged	**U.S.**	**Metric**
Length (per SAE J2022), nominal	120 in	3.05 m
Joint diameter (per SAE J2022)	2.625 in	66.7 mm
Tubing diameter (per SAE J2022)	2.38 in	60 mm
Minimum bend radius	108.2 ft	33 m
Weight (per SAE J2022), lined	73 lb	33 kg
Weight of drill pipe and large box (55 pipe)	4815 lb	2184 kg
Weight of drill pipe and small box (**25** pipe)	2325 lb	1055 kg

Operational	**U.S.**	**Metric**
Maximum spindle speed (per SAE J2022)	220 rpm	220 rpm
Maximum spindle torque	4000 ft•lb	5420 N•m
Carriage thrust travel speed (per SAE J2022)	182 fpm	55 m/min
Carriage pullback travel speed (per SAE J2022)	190 fpm	58 m/min
Thrust force (per SAE J2022)	27,000 lb	120 kN
Pullback force (per SAE J2022)	27,000 lb	120 kN
Bore diameter	4.5 in	114 mm
Backream diameter	soil dependent	
Ground travel speed (forward) (per SAE J2022)	2.4 mph	3.9 km/h
Ground travel speed (reverse) (per SAE J2022)	2.2 mph	3.5 km/h

Power		U.S.	Metric
Engine: Cummins® QSB4.5			
Fuel: diesel			
Cooling medium: liquid			
Injection: direct			
Aspiration: turbocharged and charge air cooled			
Cylinders: 4			
Displacement		275 in^3	4.5 L
Bore		4.02 in	102 mm
Stroke		5.42 in	138 mm
Tier 3 (EPA Tier 3, EU Stage IIIA)			
	manufacturer's gross power rating (per SAE J1995)	130 hp	97 kW
	estimated net power rating (per SAE J1349)	125 hp	93 kW
	rated speed	2500 rpm	2500 rpm
	peak gross power @ 2400 rpm	140 hp	104 kW
Tier 4i (EPA Tier 4i, EU Stage 3b)			
	manufacturer's gross power rating (per SAE J1995)	130 hp	97 kW
	estimated net power rating (per SAE J1349)	125 hp	93 kW
	rated speed	2500 rpm	2500 rpm
	peak gross power @ 2400 rpm	140 hp	104 kW

Drilling Fluid System (Onboard)	U.S.	Metric
Maximum drilling fluid pressure @ flow < 35 gpm (132 L/min) (per SAE J2022)	1200 psi	83 bar
Maximum drilling fluid flow @ pressure < 800 psi (55 bar) (per SAE J2022)	50 gpm	189 L/min

Fluid Capacities	U.S.	Metric
Hydraulic reservoir	27 gal	102 L
Fuel tank *	42 gal	159 L
Engine oil, including filter	12 qt	11 L
Cooling system	23 qt	22 L
Antifreeze tank	8 gal	30 L

* Under normal operating conditions, a full tank of fuel will last 10 hours.

Battery (2 used)
SAE reserve capacity 195 min, 12V, negative ground, SAE cold crank @ 0°F (-18°C), 950 amps.

Noise Levels
Operator ear sound pressure level is < or = 85 dBA sound pressure per ISO 6394 Operator ear sound pressure level (with cab) is < or = 80 dBA sound pressure per ISO 6394 Exterior sound power level is < or = 102 dBA per ISO 6393

Vibration Levels
Average vibration transmitted to the operator's hand and whole body during normal operation does not exceed 2.5 and 0.5 m/sec^2 respectively. Operator seat complies with ISO 7096.

Specifications are called out according to SAE recommended practices where indicated. Specifications are general and subject to change without notice. If exact measurements are required, equipment should be weighed and measured. Due to selected options, delivered equipment may not necessarily match that shown.

Support

Procedure

Notify your dealer immediately of any malfunction or failure of Ditch Witch® equipment.

Always give model, serial number, and approximate date of your equipment purchase. This information should be recorded and placed on file by the owner at the time of purchase.

Return damaged parts to dealer for inspection and warranty consideration if in warranty time frame.

Order genuine Ditch Witch replacement or repair parts from your authorized Ditch Witch dealer. Use of another manufacturer's parts may void warranty consideration.

Resources

Publications

Contact your Ditch Witch dealer for publications and videos covering safety, operation, service, and repair of your equipment.

Ditch Witch® Training

For information about on-site, individualized training, contact your Ditch Witch dealer.

Warranty

Ditch Witch® Equipment and Replacement Parts Limited Warranty Policy

Subject to the limitation and exclusions herein, free replacement parts will be provided at any authorized Ditch Witch dealership for any Ditch Witch equipment or parts manufactured by The Charles Machine Works, Inc. (CMW) that fail due to a defect in material or workmanship within one (1) year of first commercial use. Free labor will be provided at any authorized Ditch Witch dealership for installation of parts under this warranty during the first year following "initial commercial" use of the serial-numbered Ditch Witch equipment on which it is installed. The customer is responsible for transporting their equipment to an authorized Ditch Witch dealership for all warranty work.

Exclusions from Product Warranty

- All incidental or consequential damages.
- All defects, damages, or injuries caused by misuse, abuse, improper installation, alteration, neglect, or uses other than those for which products were intended.
- All defects, damages, or injuries caused by improper training, operation, or servicing of products in a manner inconsistent with manufacturer's recommendations.
- All engines and engine accessories (these are covered by original manufacturer's warranty).
- Tires, belts, and other parts which may be subject to another manufacturer's warranty (such warranty will be available to purchaser).
- ALL IMPLIED WARRANTIES NOT EXPRESSLY STATED HEREIN, INCLUDING ANY WARRANTY OF FITNESS FOR A PARTICULAR PURPOSE AND MERCHANTABILITY.

IF THE PRODUCTS ARE PURCHASED FOR COMMERCIAL PURPOSES, AS DEFINED BY THE UNIFORM COMMERCIAL CODE, THEN THERE ARE NO WARRANTIES WHICH EXTEND BEYOND THE FACE HEREOF AND THERE ARE NO IMPLIED WARRANTIES OF ANY KIND WHICH EXTEND TO A COMMERCIAL BUYER. ALL OTHER PROVISIONS OF THIS LIMITED WARRANTY APPLY INCLUDING THE DUTIES IMPOSED.

Ditch Witch products have been tested to deliver acceptable performance in most conditions. This does not imply they will deliver acceptable performance in all conditions. Therefore, to assure suitability, products should be operated under anticipated working conditions prior to purchase.

Defects will be determined by an inspection within thirty (30) days of the date of failure of the product or part by CMW or its authorized dealer. CMW will provide the location of its inspection facilities or its nearest authorized dealer upon inquiry. CMW reserves the right to supply remanufactured replacements parts under this warranty as it deems appropriate.

Extended warranties are available upon request from your local Ditch Witch dealer or CMW.

Some states do not allow exclusion or limitation of incidental or consequential damages, so above limitation of exclusion may not apply. Further, some states do not allow exclusion of or limitation of how long an implied warranty lasts, so the above limitation may not apply. This limited warranty gives product owner specific legal rights and the product owner may also have other rights which vary from state to state.

For information regarding this limited warranty, contact CMW's Product Support department, P.O. Box 66, Perry, OK 73077-0066, or contact your local Ditch Witch dealer.

First version: 1/91; Latest version: 11/11

A Note To Ditch Witch Equipment Owners:

If your equipment was purchased through a Ditch Witch dealer, there is no need to read further.

However, if you purchased from any other source, please fill out the form on the reverse side and return it to us.

This will enable you to receive updates on this equipment as well as information on new products of interest.

Thanks for using Ditch Witch equipment.

(Please Fold Along This Line And Seal At Bottom With Tape)

NO POSTAGE NECESSARY IF MAILED IN THE UNITED STATES

BUSINESS REPLY MAIL

FIRST CLASS PERMIT NO 23 PERRY OKLAHOMA

POSTAGE WILL BE PAID BY

The Charles Machine Works, Inc.
P.O. Box 66
Perry, Oklahoma 73077-9989

A Note To Ditch Witch Equipment Owners:

If your equipment was purchased through a Ditch Witch dealer, there is no need to read further.

However, if you purchased from any other source, please fill out the form on the reverse side and return it to us.

This will enable you to receive updates on this equipment as well as information on new products of interest.

Thanks for using Ditch Witch equipment.

(Please Fold Along This Line And Seal At Bottom With Tape)

NO POSTAGE NECESSARY IF MAILED IN THE UNITED STATES

BUSINESS REPLY MAIL

FIRST CLASS PERMIT NO 23 PERRY OKLAHOMA

POSTAGE WILL BE PAID BY

The Charles Machine Works, Inc.
P.O. Box 66
Perry, Oklahoma 73077-9989

Ditch Witch® Registration Card

Please Type or Print All Information

Purchaser's Company Name

Attention

Street Address or P.O. Box

City County

State Zip Nation

( )

Phone Number With Area Code

Model Serial Number

Attachments/Accessories Serial Numbers

Attachments/Accessories Serial Numbers

Attachments/Accessories Serial Numbers

Name of Ditch Witch Dealership

Your Signature

Ditch Witch® Registration Card

Please Type or Print All Information

Purchaser's Company Name

Attention

Street Address or P.O. Box

City County

State Zip Nation

( )

Phone Number With Area Code

Model Serial Number

Attachments/Accessories Serial Numbers

Attachments/Accessories Serial Numbers

Attachments/Accessories Serial Numbers

Name of Ditch Witch Dealership

Your Signature

Service Record

Service Performed	Date	Hours

Service Performed	Date	Hours