Foreword

This guide is an important part of your attachment. It provides safety, operation, parts, and maintenance information to help you use and maintain your Ditch Witch equipment.

Read this manual and the unit operator's manual before using your attachment. Keep it with the equipment at all times for future reference. If you sell your equipment, be sure to give this manual to the new owner.

If you need a replacement copy, contact your Ditch Witch dealer. If you need assistance in locating a dealer, visit our website at www.ditchwitch.com or write to the following address:

The Charles Machine Works, Inc.
Attn: Marketing Department
PO Box 66
Perry, OK 73077-0066
USA

The descriptions and specifications in this manual are subject to change without notice. The Charles Machine Works, Inc. reserves the right to improve equipment. Some product improvements may have taken place after this manual was published. For the latest information on Ditch Witch equipment, see your Ditch Witch dealer.

Thank you for buying and using Ditch Witch equipment.

All Terrain Air Hammer Attachment Operation and Parts Manual

Issue number 2.0 OM-1/12

Part number ID0273478

Safety

- Read and follow all safety precautions.
- Contact One-Call (888-258-0808) or your local utility company. Have all underground lines and cable located and marked before operating equipment. Know appropriate actions to take in case you damage a utility. If you damage a utility, contact utility company.
- Mark jobsite clearly and keep spectators away.
- Wear personal protective equipment. Do not wear jewelry or loose clothing that can catch on controls.
- Use equipment carefully. Stop operation and investigate anything that does not look or feel right.
- Contact your Ditch Witch dealer if you have any question about operation, maintenance, or equipment use.

WARNING Jobsite hazards could cause death or serious injury. Use correct equipment and work methods. Use and maintain proper safety equipment.

WARNING Improper control function could cause death or serious injury. If control does not work as described in instructions, stop machine and have it serviced.

WARNING Incorrect procedures could result in death, injury, or property damage. Learn to use equipment correctly.

WARNING Moving parts could cut off hand or foot. Stay away.

DANGER Electrical shock. Contacting electrical lines will cause death or serious injury. Know location of lines and stay away.

WARNING Crushing weight could cause death or serious injury. Use proper procedures and equipment or stay away.

CAUTION Flying objects may cause injury. Wear hard hat and safety glasses.

CAUTION Exposure to high noise levels may cause hearing loss. Wear hearing protection.

WARNING Pressurized fluid or air could pierce skin and cause injury or death. Stay away.

CAUTION Hot parts may cause burns. Do not touch until cool.

WARNING Moving tools will kill or injure. Shut off drill string power when anyone can be struck by moving or thrown tools. Never use pipe wrenches on drill string.

CAUTION Improper handling or use of chemicals may result in illness, injury, or equipment damage. Follow instructions on labels and in material safety data sheets (MSDS).

Overview

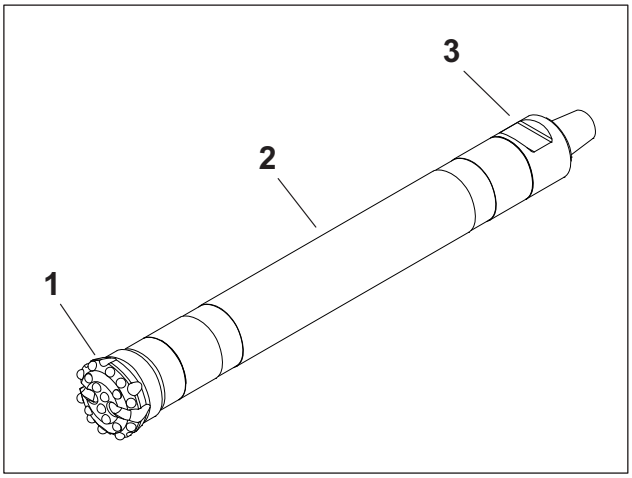

a38om001t.eps

Component	Description
1. Bit	holds cutting teeth that chip rock at impact
2. Hammer	houses the percussion piston
3. Hydrocyclone	separates pressurized air from water in foam mix

The All Terrain Air Hammer is designed for use on directional drills in hard rock applications. The air hammer uses air pressure to create percussive force, which drives cutting inserts into rock. After the "drive" air has produced impact, it is expelled as "return" air that removes cuttings. Foam mix injected into the bore through the drill string is used to suppress dust and clean the bore.

Prepare Foam Mix

The manufacturer recommends the use of Baroid Quik-Foam® foaming agent (p/n 255-1023) to improve hole-cleaning capability of the airstream and reduce dust during drilling.

As a general guideline, use 0.25-1 gal (0.9-3.8 L) of foam agent for each 100 gal (379 L) of water.

For more information, see the instructions for foam drilling system mixtures included with the foaming agent or contact your Ditch Witch dealer.

CAUTION Improper handling or use of chemicals may result in illness, injury, or equipment damage. Follow instructions on labels and in material safety data sheets (MSDS).

To help avoid injury:

- Flammable.
- Do not allow QuikFoam to enter sewer, water way, or low area. Contain all product and dispose properly.
- Quik-Foam may cause eye, skin, and respiratory irritation. May cause headache, dizziness, and other central nervous system affects. May be absorbed through the skin. May be harmful if swallowed. Repeated overexposure may cause liver and kidney effects.
- Use appropriate protective equipment.
- See Quik-Foam MSDS (available on www.ditchwitch.com) for more information.

Prepare Entry Point

CAUTION Flying objects may cause injury. Wear hard hat and safety glasses.

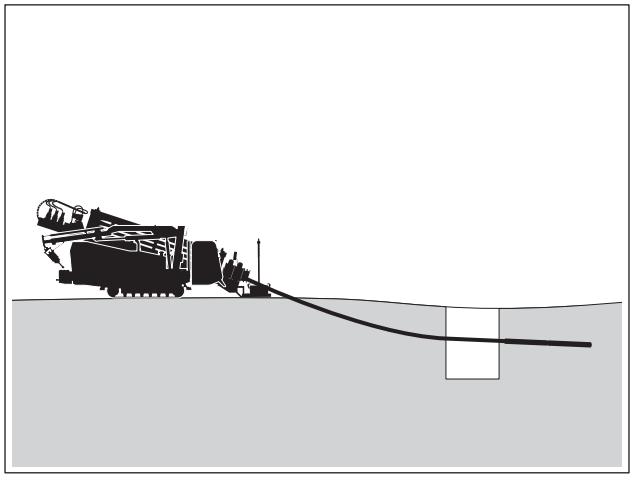

a38om005t.eps

1. Dig an entry pit approximately 10-15 ft (3-4.5 m) in front of the drilling unit to collect spoils and foam blowback. The pit should be approximately 6 ft (1.8 m) long, 3 ft (0.9 m) wide, and deep enough to expose the drill string.
2. Drill into the ground, through the entry pit, and continue bore.

IMPORTANT: It may be necessary to cover the entry pit with a sheet of plywood or other durable material to contain blowback material.

Connect Air Adaptor

To operate the air hammer, modify the drilling fluid pump onboard the drilling unit to provide air flow to the hammer.

WARNING Pressurized fluid or air could pierce skin and cause injury or death. Stay away.

To help avoid injury:

- Escaping pressurized fluid or air can cause injury or pierce skin and poison.
- Before disconnecting a hydraulic line or pressurized air line, turn engine off and operate all controls to relieve pressure. Lower, block, or support any raised component with a hoist. Cover connection with heavy cloth and loosen connector nut slightly to relieve residual pressure.
- Before using system, check that all connections are tight and all lines are undamaged.
- Fluid and air leaks can be hard to detect. Use a piece of cardboard or wood, rather than hands, to search for leaks.
- Wear protective clothing, including gloves and eye protection.
- If you are injured, seek immediate medical attention from a doctor familiar with this type of injury.

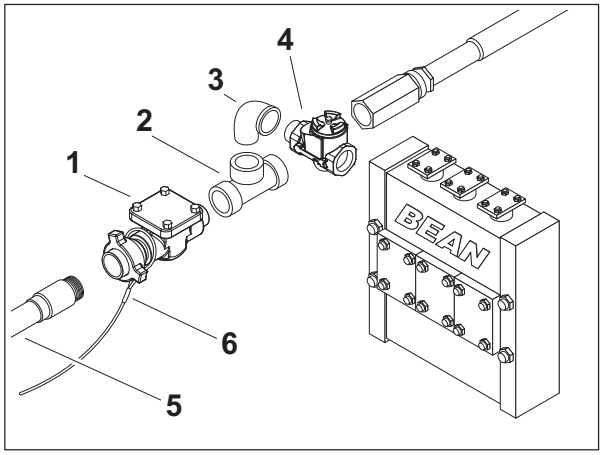

a38om003t.eps

Note: See parts pages for a complete list of parts.

1. Disconnect washwand from drilling fluid pump inlet.
2. Install check valve (4) in drilling fluid pump inlet.
3. Connect elbow and T-fitting (3, 2) to check valve.
4. Connect air adaptor (1) to rear of T-fitting.
5. Connect whip check cable (6) and air compressor hose (5) to air adaptor.

Connect Air Hammer

IMPORTANT: The procedures below require the use of a Hydratong wrench to tighten connections. See "Use Hydratong Wrenches" on page 4.

Install Bit

1. Lubricate bit splines and chuck threads with copper or zinc based tool joint compound.
2. Slide chuck over bit splines and secure with retaining rings.
3. Thread bit/chuck assembly into hammer housing.
4. Use appropriate bit ring and chrome pins included with air hammer with Hydratong wrench. Place chain tongs no less than 6.5" (152 mm) and no more than 17" (432 mm) from chuck.

NOTICE: Using wrench tongs to grip the hammer casing in the wrong location can damage threads or distort the casing.

5. Tighten to 6000 ft•lb (8135 N•m).

Assemble Drill String

1. Connect air hammer to Rockmaster beacon housing using Hydratong wrench and air hammer wrench insert.
2. Follow the instructions in your drilling unit operator's manual to prepare and calibrate the beacon before drilling.
3. Connect air hammer/beacon assembly to drill string.

Use Hydratong Wrenches

To attach or remove downhole tools, use the Hydratong wrenches to join or break the joint.

WARNING Incorrect procedures could result in death, injury, or property damage. Learn to use equipment correctly.

To help avoid injury:

- Ensure only chain tongs and chain are in contact with pipe (shown) and that chain is correctly wrapped. Do not use Hydratong with chain bushing pin touching pipe (shown).
- Stand away from the Hydratong when using it.

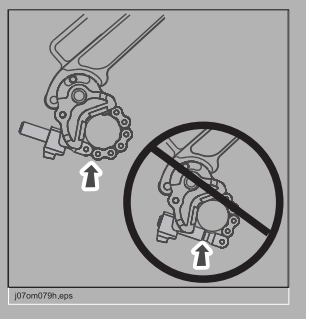

CAUTION Moving tools will kill or injure. Shut off drill string power when anyone can be struck by moving or thrown tools. Never use pipe wrenches on drill string.

1. To join, apply tool joint compound to threads and hand tighten joint.
2. Attach Hydratong in either the join or break position.

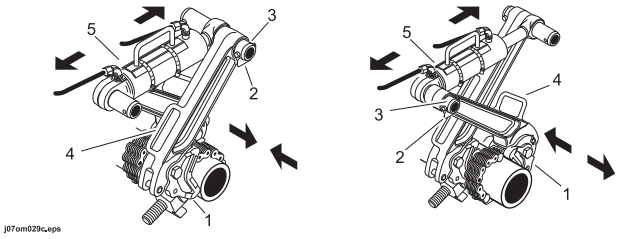

Join **Break**

IMPORTANT: Ensure arms are crossed before using wrench.

- Attach chain tongs (1) to both sides of joint. Place tongs as close to joint as possible.
- Remove snapper pins (2) from slide pins (3), and insert slide pins into wrench handles (4).
- Attach each end of hydraulic cylinder (5) to slide pins and insert snapper pins.

3. Remove all slack from wrench and joint.

4. To join, scribe straight line across joint on both sides of separating line (A).
5. To join, scribe second line (B) on moveable side of joint in the opposite direction of tightening action. Refer to table for correct dimension.

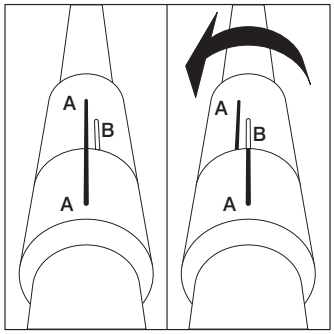

j07om071h.eps

6. Connect Hydratong power pack.
   - Attach hoses from power pack to cylinder.
   - Attach leads (4) to 12V battery.

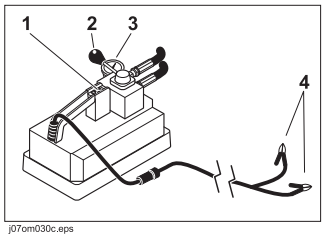

j07om030c.eps

7. To tighten or loosen joint, move shuttle valve handle (2) toward gauge (3) and press power switch (1).
8. To reposition chain tongs and continue tightening or loosening joint, move handle away from gauge, then back toward gauge, and then press power switch.
9. Monitor gauge and refer to decal to achieve approximately 4000 ft•lb (5420 N•m) of torque. Then tighten joint until second line (B) meets first (A).

IMPORTANT: Gauge gives an estimate of torque. Use scribe line to get exact torque.

10. Move handle to center (neutral) position to relieve pressure.
11. Disconnect hoses and remove Hydratong components.

Operate Air Hammer

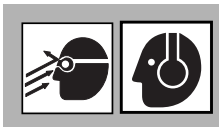

WARNING Wear hearing and eye protection when operating air hammer.

To start hammering, turn on the drill fluid pump. Air will enter the drill string.

IMPORTANT: The air hammer requires resistance to fire. If the bit is not next to hard rock air will simply flow through the hammer without triggering percussion.

Monitor Gauges

Drill Fluid

Maintain drill fluid flow at 2-10 gpm (7.5-38 L/min) depending on the hole size, rate of penetration, and type of material being drilled. The ideal drill fluid flow produces a thin foam that allows cuttings to be cleared from the hole without sticking to drill pipe.

Rotation

The correct rotation speed produces the best penetration rate, the longest drill bit life, and smooth operation.

1. For a 6.5" (165 mm) bit with spherical inserts, begin with inner rotation of 25 rpm.
2. Adjust rotation until penetration is approximately 3/8-5/8" (9.5-116 mm) per revolution.

Thrust

Maintain thrust at about 3200 lbf (14 kN) when operating at maximum power. This is theoretically 600-800 psi (40-55 bar) as measured by the thrust pressure gauge on the drilling unit.

Note: Some operators increase thrust until rotation pressure begins to pulse, then reduce thrust slightly until rotation is smooth.

Monitor Cuttings

Monitor spoils leaving the bore at the entry pit. If cuttings are not clearing the hole, a different drill fluid mixture might be needed to seal the bore.

Set Cruise Control

Once bore is established, set cruise control. (See drilling unit operator's manual for instructions.)

Add Pipe

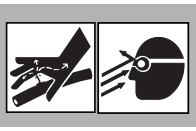

WARNING Pressurized fluid or air could pierce skin and cause injury or death. Stay away.

Drill string contains pressurized air and water. Before breaking joints to add pipe, stop drilling fluid flow and wait for the reading on the drill fluid pressure gauge to drop.

Storage

If the air hammer will not be used for 48 hours after drilling, coat the inside of the hammer with oil.

To add oil, choose one of the methods below:

- If the hammer is connected to the drill string, turn off drilling fluid supply to the drilling unit. Operate hammer to push remaining fluid out of hammer. Break joint and pour 1 pint (0.5 L) of oil into the last drill pipe. Operate hammer to blow oil through the hammer components.
- If the hammer is not connected to the drill string, remove bit and pour oil into the hammer housing. Rotate hammer housing so that oil coats the inside.

Store air hammer in a clean, dry place. Cover air hammer to keep it clean. For long-term storage, place tool vertically.

Service

Each Use

Inspect Hydrocyclone

Inspect hydrocyclone after each bore to ensure that backhead ports are passing air.

10-Hour

Grease Rockmaster Beacon Housing

Install zerk and pump multi-purpose grease into lube point at the beginning of each bore and every 10 hours of operation.

Every 15, 000 ft (4575 m)

Check Air Hammer

Disassemble air hammer and inspect inner components every 15, 000 ft (4575 m) of use. Replace components as needed and reassemble tool.

Disassemble

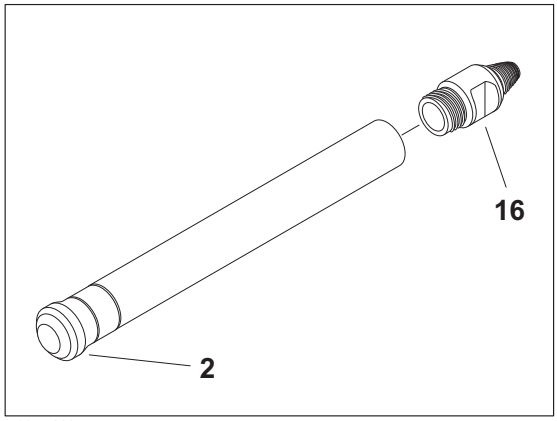

a38om006t.eps

1. Break joint at bit (2). Do not remove bit and chuck.
2. Break backhead joint and remove backhead (16).

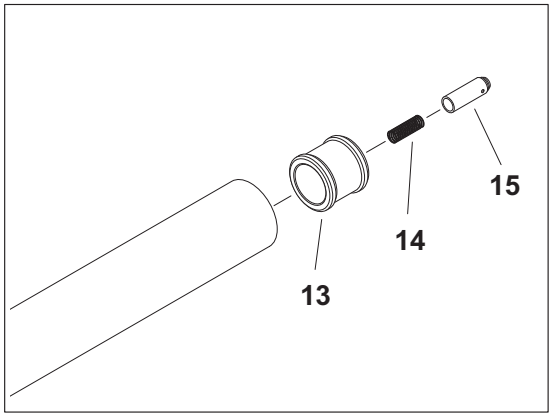

a38om007t.eps

3. Remove dart valve (15) and spring (14) assembly.
4. Remove make-up spacer (13).

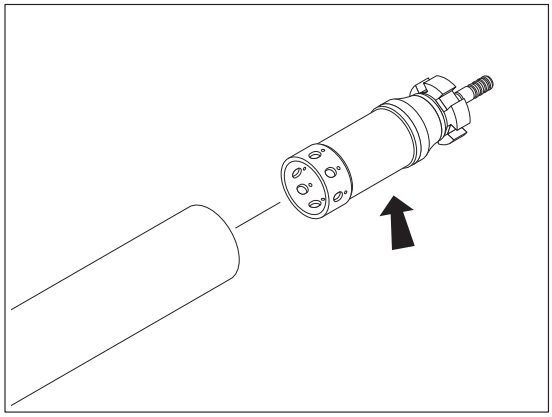
a38om008t.eps

5. Remove valve cap/valve/distributor/air cylinder assembly (shown).

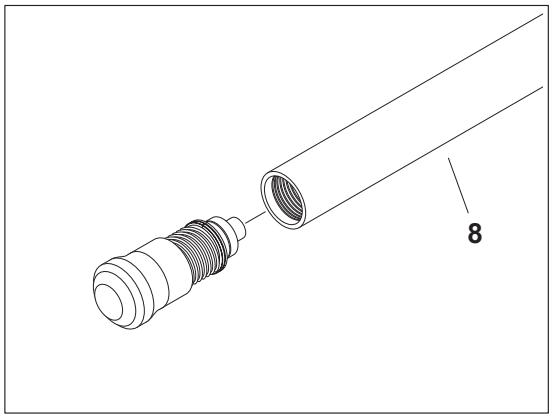

a38om023t.eps

6. Remove bit/chuck assembly from casing (8).

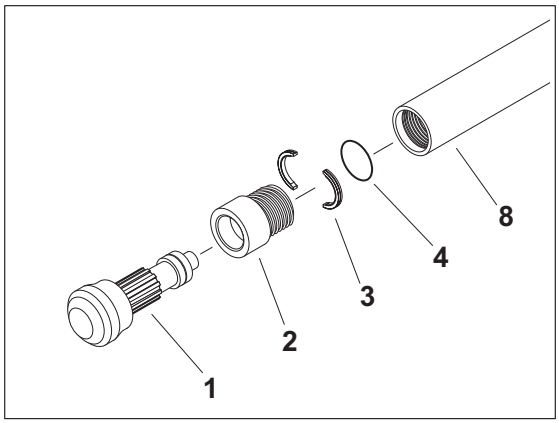

a38om021t.eps

7. Disassemble bit (1) from chuck (2) by removing o-ring (4) from around bit lock (3).

WARNING Crushing weight could cause death or serious injury. Use proper procedures and equipment or stay away.

To help avoid injury:

- Use proper lifting equipment and lifting procedures.
- Use team lifting when necessary.

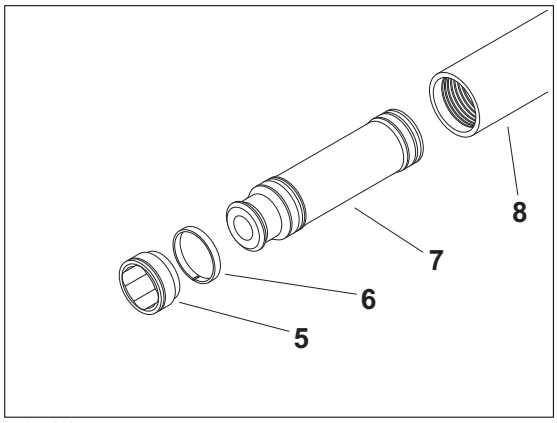

a38om010t.eps

5. bit bearing
6. lock ring
7. piston

8. Remove bit bearing/lock ring/piston assembly by slamming casing (8) on a block of wood. Disassemble parts as shown.

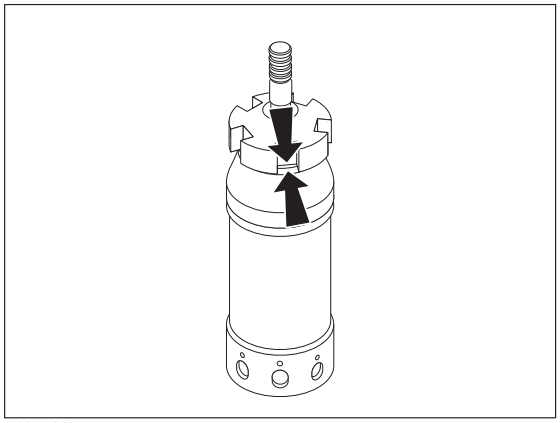

a38om011t.eps

9. Using a pry bar or screwdriver, pry up on the valve cap where shown on both sides to remove.

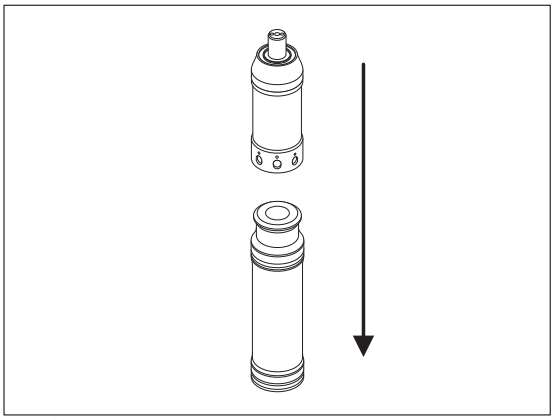

a38om012t.eps

10. Slam remaining parts of valve/distributor/cylinder assembly on piston (7) until valve and distributor separate from the inner air cylinder.

Assemble

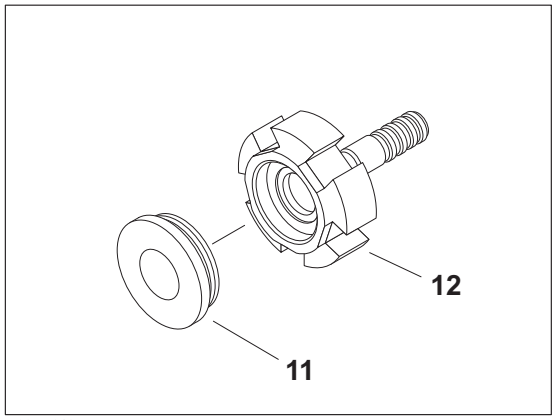

a38om013t.eps

1. Press valve (11) firmly into valve cap (12).

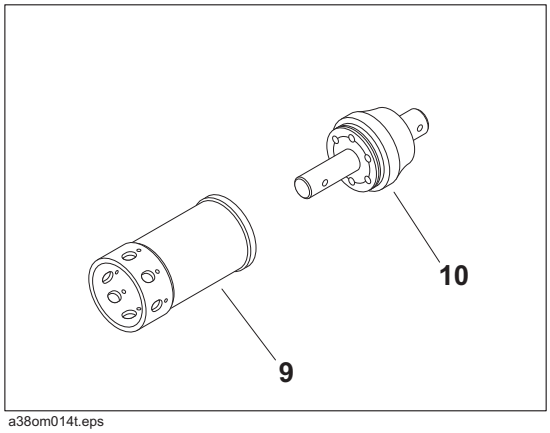

a38om014t.eps

2. Press distributor (10) firmly into inner air cylinder (9).

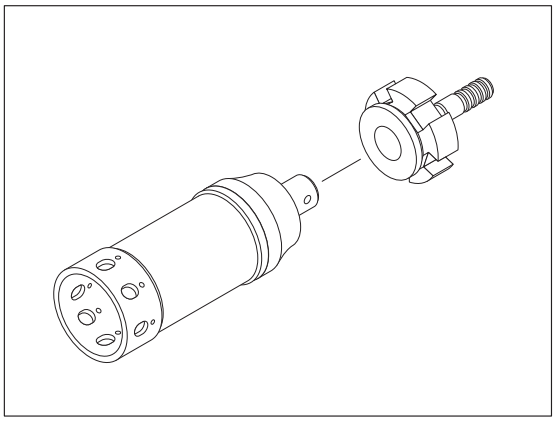

a38om015t.eps

3. Press valve assembly firmly into distributor/cylinder assembly.

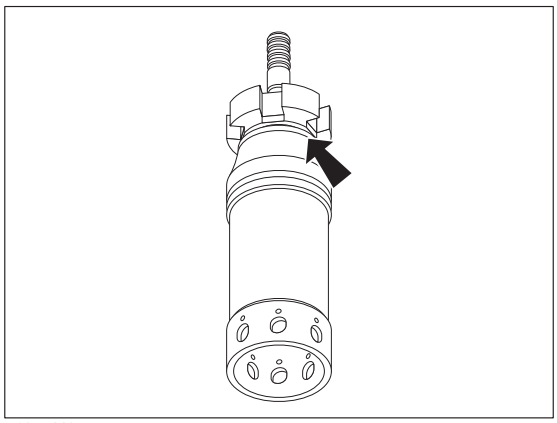

a38om016t.eps

Verify valve has approximately 0.05 in (1.3 mm) of free movement, as shown.

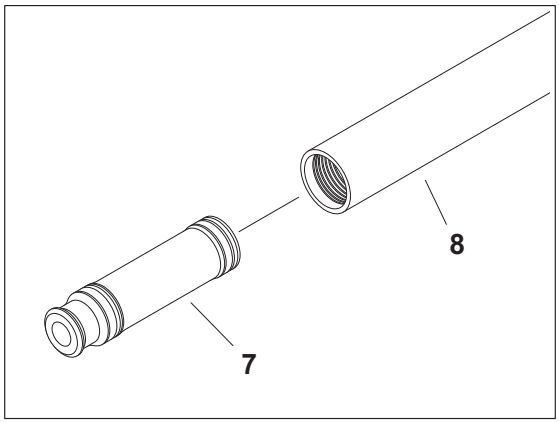

a38om018t.eps

4. Insert piston assembly (7) into casing (8).

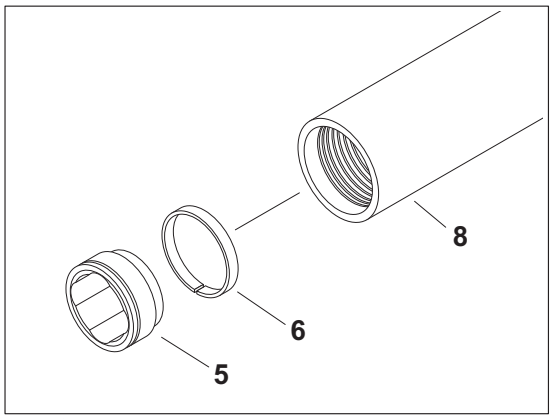

a38om019t.eps

5. Click lock ring (6) into place and then install bit bearing (5) into casing (8). Use a bar to tap bearing until it is seated. Use bit lock as spacing guide.

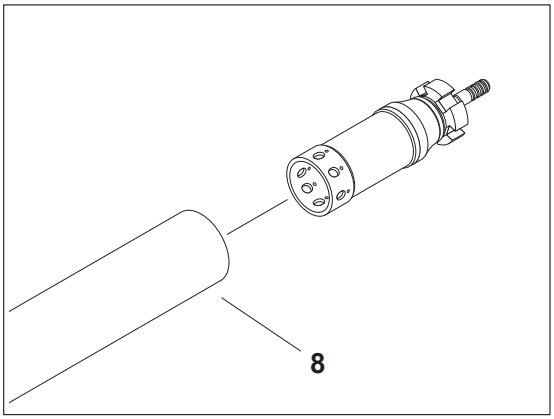

a38om017t.eps

6. Slide valve assembly into opposite end of casing (8).
7. Install make-up spacer, spring, and dart valve.

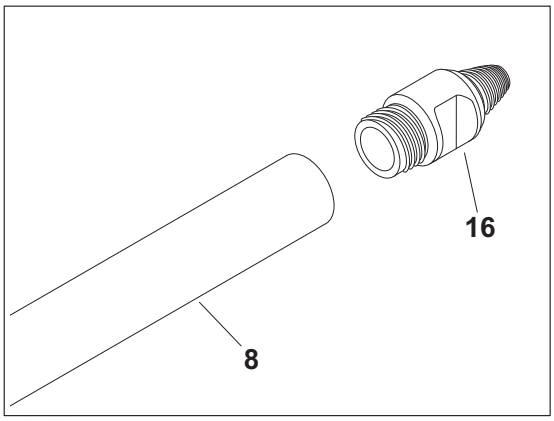

a38om020t.eps

8. Install backhead (16) into casing (8).
9. Install bit. "Change Air Hammer Bits" on page 10

As Needed

Change Air Hammer Bits

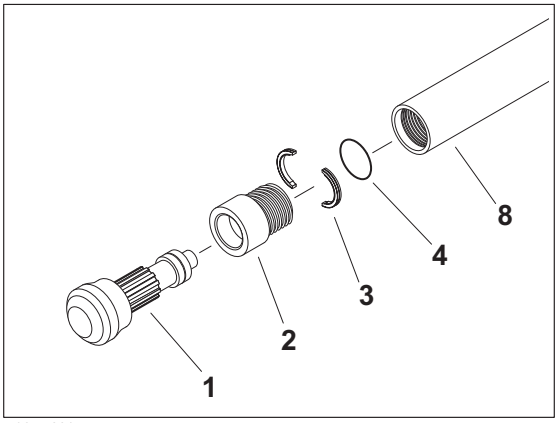

a38om021t.eps

Change air hammer bits whenever inserts are worn.

To remove:

1. Break joint at chuck and remove bit/chuck assembly.
2. Remove o-ring (4) from bit lock (3).
3. Remove bit (1) from chuck (2).

To install:

1. Slide bit (1) into chuck (2).
2. Assemble bit lock (3) over end of bit and secure with o-ring (4).
3. Install bit/chuck assembly into casing (8) and tighten to 6000 ft•lb (8124 N•m).

Specifications

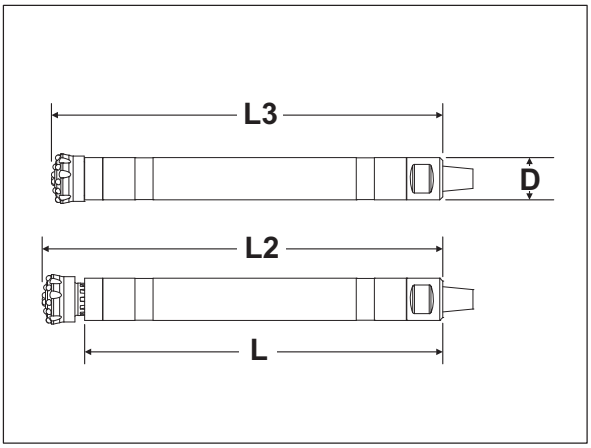

a38om004t.eps

General		U.S.	Metric
	Standard drill pipe connection	3.5 in API Reg Pin	
	Shank style	QL 60	
D	Outside diameter	5.4 in	138,2 mm
L1	Length without bit shoulder to shoulder	44.6 in	1131,8 mm
L2	Length with bit extended	49.5 in	1256,3 mm
L3	Length with bit retracted	48.1 in	1220,7 mm
	Weight without bit	200 lb	90,9 kg
	Backhead across flats	2x4 AF	
	Recommended air pressure	350 psi	24,1 bar
	Make-up torque	6000 ft•lb	8124,0 N•m
	Recommended fluid flow	3-4 gpm	
	Air volume	973 cfm	458 L/sec
	Blows per minute	1770	1770

Support

Procedure

Notify your dealer immediately of any malfunction or failure of Ditch Witch equipment.

Always give model, serial number, and approximate date of your equipment purchase. This information should be recorded and placed on file by the owner at the time of purchase.

Return damaged parts to dealer for inspection and warranty consideration if in warranty time frame.

Order genuine Ditch Witch replacement or repair parts from your authorized Ditch Witch dealer. Use of another manufacturer's parts may void warranty consideration.

Resources

Publications

Contact your Ditch Witch dealer for publications and videos covering safety, operation, service, and repair of your equipment.

Ditch Witch Training

For information about on-site, individualized training, contact your Ditch Witch dealer.

Warranty

Ditch Witch Equipment and Replacement Parts Limited Warranty Policy

Subject to the limitation and exclusions herein, free replacement parts will be provided at any authorized Ditch Witch dealership for any Ditch Witch equipment or parts manufactured by The Charles Machine Works, Inc. (CMW) that fail due to a defect in material or workmanship within one (1) year of first commercial use (Exception: 2 years for all SK attachments). Free labor will be provided at any authorized Ditch Witch dealership for installation of parts under this warranty during the first year following "initial commercial" use of the serial-numbered Ditch Witch equipment on which it is installed. The customer is responsible for transporting their equipment to an authorized Ditch Witch dealership for all warranty work.

Exclusions from Product Warranty

- All incidental or consequential damages.
- All defects, damages, or injuries caused by misuse, abuse, improper installation, alteration, neglect, or uses other than those for which products were intended.
- All defects, damages, or injuries caused by improper training, operation, or servicing of products in a manner inconsistent with manufacturer's recommendations.
- All engines and engine accessories (these are covered by original manufacturer's warranty).
- Tires, belts, and other parts which may be subject to another manufacturer's warranty (such warranty will be available to purchaser).
- ALL IMPLIED WARRANTIES NOT EXPRESSLY STATED HEREIN, INCLUDING ANY WARRANTY OF FITNESS FOR A PARTICULAR PURPOSE AND MERCHANTABILITY.

IF THE PRODUCTS ARE PURCHASED FOR COMMERCIAL PURPOSES, AS DEFINED BY THE UNIFORM COMMERCIAL CODE, THEN THERE ARE NO WARRANTIES WHICH EXTEND BEYOND THE FACE HEREOF AND THERE ARE NO IMPLIED WARRANTIES OF ANY KIND WHICH EXTEND TO A COMMERCIAL BUYER. ALL OTHER PROVISIONS OF THIS LIMITED WARRANTY APPLY INCLUDING THE DUTIES IMPOSED.

Ditch Witch products have been tested to deliver acceptable performance in most conditions. This does not imply they will deliver acceptable performance in all conditions. Therefore, to assure suitability, products should be operated under anticipated working conditions prior to purchase.

Defects will be determined by an inspection within thirty (30) days of the date of failure of the product or part by CMW or its authorized dealer. CMW will provide the location of its inspection facilities or its nearest authorized dealer upon inquiry. CMW reserves the right to supply remanufactured replacements parts under this warranty as it deems appropriate.

Extended warranties are available upon request from your local Ditch Witch dealer or CMW.

Some states do not allow exclusion or limitation of incidental or consequential damages, so above limitation of exclusion may not apply. Further, some states do not allow exclusion of or limitation of how long an implied warranty lasts, so the above limitation may not apply. This limited warranty gives product owner specific legal rights and the product owner may also have other rights which vary from state to state.

For information regarding this limited warranty, contact CMW's Product Support department, P.O. Box 66, Perry, OK 73077-0066, or contact your local Ditch Witch dealer.

First version: 1/91; Latest version: 7/05